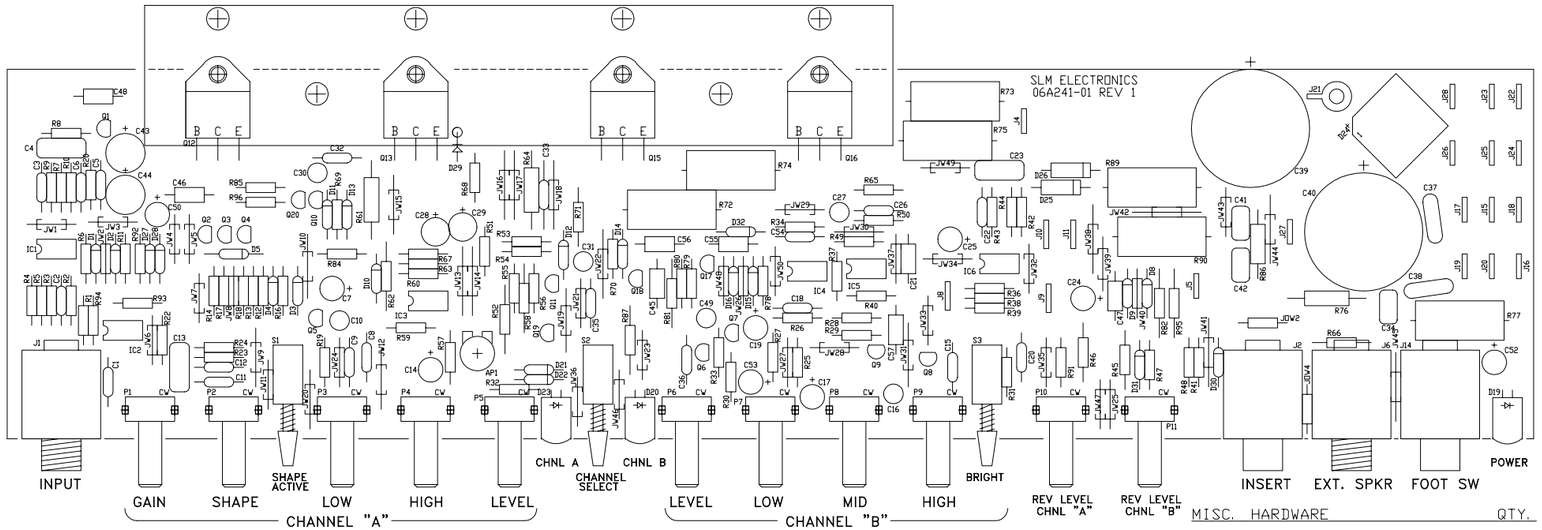

AP1	71-503-02	50K	
C1	10A682-01	0.0068	
C2	10A682-01	0.0068	
C3	10A332-01	0.0033	
C4	10-224-03	.22uF	100V
C5	10A153-01	0.015	
C6	10A153-01	0.015	
☒C7	12R105-50	1uF	50V
C8	10A472-11	.0047uF	
C9	10A474-01	.47uF	
☒C10	12R105-51	1uF	NP
C11	10A333-01	.033uF	
C12	10A562-01	0.0056	
C13	10-224-03	.22uF	100V
☒C14	12R105-50	1uF	50V
C15	10A152-11	.0015uF	
☒C16	12R225-51	2.2uF	NP
☒C17	12R105-50	1uF	50V
C18	10A560-21	56pF	
☒C19	12R105-51	1uF	50V
C20	10A222-11	.0022uF	
C21	10A473-11	0.047	
C22	10A560-21	56pF	
C23	10-224-03	.22uF	100V
☒C24	12R105-50	1uF	50V
☒C25	12R105-50	1uF	50V
C26	10A221-11	220pF	
☒C27	12R225-51	2.2	NP
☒C28	12R226-32	22	35V
☒C29	12R226-32	22	35V
☒C30	12R105-51	1uF	NP
☒C31	12R105-51	1uF	NP
C32	10A471-11	470pf	100V
C33	10A471-11	470pf	100V
C34	10-104-03	0.1	100V
C35	10A103-11	0.01	
C36	10A103-11	0.01	
C37	10-332-01	0.0033	UL
C38	10-332-01	0.0033	UL
C39	12-478-53	4700	50V
C40	12-478-53	4700	50V
C41	10-104-03	0.1	100V
C42	10-104-03	0.1	100V
☒C43	12R107-32	100	35V
☒C44	12R107-32	100	35V
C45	10A473-11	0.047	
C46	10A473-11	0.047	
C47	10A473-11	0.047	
C48	10A473-11	0.047	
☒C49	12R105-51	1uF	NP
☒C50	12R105-50	1uF	50V
☒C52	12R105-50	1uF	50V
☒C53	12R105-50	1uF	50V
C54	10A560-21	56pF	
C55	10A473-11	.047uF	
C56	10A104-01	.1uF	
C57	10A104-01	.1uF	
D1	21A914-01	1N914	
D2	21A914-01	1N914	
D3	21A914-01	1N914	
D4	21A914-01	1N914	
D5	21A914-01	1N914	
D6	NOT USED		
D7	NOT USED		
D8	21A914-01	1N914	
D9	21A914-01	1N914	
D10	21A454-01	1N4754	39V/
D11	21A914-01	1N914	
D12	21A914-01	1N914	
D13	21A914-01	1N914	
D14	21A914-01	1N914	
D15	21A914-01	1N914	
D16	21A914-01	1N914	
D19	21-571-03	RED	LED
D20	21-571-02	GREEN	LED
D21	21A914-01	1N914	
D22	21A914-01	1N914	
D23	21-571-03	RED	LED
D24	21-206-01	3AMP	DIODE BRDG
D25	21-553-01	1N5353	16V
D26	21-553-01	1N5353	16V
D27	21A914-01	1N914	
D28	21A914-01	1N914	
D29	21-914-01	1N914	
D30	21A146-01	1N746A	3.3V
D31	21A146-01	1N746A	3.3V
D32	21A914-01	1N914	
IC1	37-072-01	TL072	
IC2	37-072-01	TL072	
IC3	37-532-01	NE5532	
IC4	37-072-01	TL072	
IC5	37-072-01	TL072	
IC6	37-072-01	TL072	
J1	39-116-01	T/S	JACK
J2	39-117-01	T/R/S	JACK
J4	17-836-01	TAB	
J5	17-836-01	TAB	
J6	39-116-01	T/S	JACK
J8	17-836-01	TAB	
J9	17-894-01	TAB	
J10	17-894-01	TAB	
J11	17-894-01	TAB	
J12	NOT USED		
J13	NOT USED		
J14	39-117-01	T/R/S	JACK
J15	17-836-01	TAB	
J16	17-836-01	TAB	
J17	17-836-01	TAB	
J18	17-836-01	TAB	
J19	17-836-01	TAB	
J20	17-836-01	TAB	
J21	17-500-01	GNDLUG	
J22	17-836-01	TAB	
J23	17-836-01	TAB	
J24	17-836-01	TAB	
J25	17-836-01	TAB	
J26	17-836-01	TAB	
J27	17-836-01	TAB	
J28	17-836-01	TAB	
J29	NOT USED		
J29A	NOT USED		
J30	NOT USED		
J31	NOT USED		
JDW1	NOT USED		
JDW2	76-000-XX	JUMPER	
JDW3	NOT USED		
JDW4	76-000-XX	JUMPER	
JW1-50	76-000-XX	JUMPER	
P1	70-254-62	250KA	
P2	70-103-61	10KL	
P3	70-103-68	10KA	
P4	70-103-61	10KL	
P5	70-103-68	10KA	
P6	70-103-61	10KL	
P7	70-103-68	10KA	
P8	70-501-62	500A	
P9	70-103-61	10KL	
P10	70-103-68	10KA	
P11	70-103-68	10KA	
☒Q1	96R112-01	J112	
☒Q2	96R112-01	J112	
☒Q3	96R510-01	2N5210	
☒Q4	96R510-01	2N5210	
☒Q5	96R112-01	J112	
☒Q6	96R112-01	J112	
☒Q7	96R112-01	J112	
☒Q8	96R112-01	J112	
☒Q9	96R112-01	J112	
☒Q10	96R006-01	MPS-A06	
☒Q11	96R055-01	MPS-A55	
Q12	96-142-01	TIP-142	
Q13	96-142-01	TIP-142	
Q15	96-147-01	TIP-147	
Q16	96-147-01	TIP-147	
☒Q17	96R055-01	MPS-A55	
☒Q18	96R013-01	MPSA13	
☒Q19	96R112-01	J112	
☒Q20	96R175-01	J175	
R1	76-153-01	15K	
R2	76-474-01	470K	
R3	76-474-01	470K	
R4	76-682-01	6.8K	
R5	76-472-01	4.7K	
R6	76-153-01	15K	
R7	76-223-01	22K	
R8	76-152-01	1.5K	
R9	76-223-01	22K	
R10	76-681-01	680	
R11	76-102-01	1K	
R12	76-473-01	47K	
R13	76-473-01	47K	
R14	76-223-01	22K	
R16	76-103-01	10K	
R17	76-473-01	47K	
R18	76-102-01	1K	
R19	76-101-01	100	
R20	76-105-01	1M	
R22	76-102-01	1K	
R23	76-472-01	4.7K	
R24	76-472-01	4.7K	
R25	76-682-01	6.8K	
R26	76-154-01	150K	
R27	76-102-01	1K	
R28	76-472-01	4.7K	
R29	76-223-01	22K	
R30	76-473-01	47K	
R31	76-105-01	1M	
R32	76-472-01	4.7K	
R33	76-472-01	4.7K	
R34	76-223-01	22K	
R35	NOT USED		
R36	76-104-01	100K	
R37	76-103-01	10K	
R38	76-470-01	47	
R39	76-103-01	10K	
R40	76-103-01	10K	
R41	76-222-01	2.2K	
R42	76-103-01	10K	
R43	76-474-01	470K	
R44	76-103-01	10K	
R45	76-103-01	10K	
R46	76-103-01	10K	
R47	76-103-01	10K	
R48	76-222-01	2.2K	
R49	76-103-01	10K	
R50	76-682-01	6.8K	
R51	76-472-01	4.7K	
R52	76-683-01	68K	
R53	76-472-01	4.7K	
R54	76-472-01	4.7K	
R55	76-913-01	91K	
R56	76-472-01	4.7K	
R57	76-102-02	1K	1%
R58	76-102-02	1K	1%
R59	76-682-02	6.81K	1%
R60	76-682-02	6.81K	1%
R61	78-821-01	820	1W
R62	76-102-01	1K	
R63	76-102-01	1K	
R64	78-821-01	820	1W
R65	76-224-01	220K	
R66	76-222-01	2.2K	
R67	76-221-01	220	
R68	76-221-01	220	
R69	76-472-01	4.7K	
R70	76-472-01	4.7K	
R71	76-221-01	220	
R72	78-330-05	0.33	5W
R73	78-330-05	0.33	5W
R74	78-330-05	0.33	5W
R75	78-330-05	0.33	5W
R76	78-033-01	3.3	1W
R77	78-001-05	0.1	5W
R78	76-222-01	2.2K	
R79	76-333-01	33K	
R80	76-333-01	33K	
R81	76-105-01	1M	
R82	76-152-01	1.5K	
R84	76-333-01	33K	
R85	76-105-01	1M	
R86	77-752-01	7.5K	1/2W
R87	76-152-01	1.5K	
R88	NOT USED		
R89	78-271-05	270	5W
R90	78-271-05	270	5W
R91	76-103-01	10K	
R92	76-102-01	1K	
R93	76-103-01	10K	
R94	76-472-01	4.7K	
R95	76-471-01	470	
R96	76-333-01	33K	
S1	88-302-01	DUAL	SWIT
S2	88-302-01	DUAL	SWIT
S3	88-302-01	DUAL	SWIT

MISC. HARDWARE		QTY.
33-241-01	HEATSINK BRACKET	1
35-575-02	INSULATOR PAD	4
06A241-01	PC BOARD	1
35-043-01	BUSHING	4
30-440-02	4-40 X 3/8" SCREW	4
30-700-01	6-32 NUT	2
30-650-53	6-32 X 1/2" SCREW	2

NOTES

1) CAUTION: SHOCK HAZARD!!
THIS UNIT CONTAINS HAZARDOUS VOLTAGE. DISCONNECT POWER AND BE SURE POWER SUPPLY IS DISCHARGED BEFORE TOUCHING INTERNAL PARTS.

2) UNLESS NOTED, RESISTOR VALUES IN OHMS, 1/4W-5% TOL. CAPACITOR VALUES IN MICROFARADS, 50V-10% TOL.

3) VOLTAGES ARE MEASURED WITH 1 MEGOHM OSCILLOSCOPE AND 10 MEGOHM DIGITAL VOLTMETER.

4) (76-000-XX) JUMPER PART NUMBER TO BE DEFINED BY BOM

REV	DATE	BY	CHK'D	DESCRIPTION
9				
☒	10/01/97	DLS		CHANGED OUT PARTS PER E970530
7	09/23/97	MAG		CHG'D 30-440-06 TO 30-440-02 ON PICTORIAL PER ECO 970543.
6	08/15/97	SWR		ADDED T1 WIRING DIAGRAM TO SCHEMATIC. PICTORIAL NOT AFFECTED. PER ECO #970444.
5	03/15/97	MAG		ADDED GOOP DWG (PG 2) PER ECO 970016.
4	01/16/97	MAG		CHG'D NOTES PER ECO 970023.
3	10/6/95	REM		CHG'D J8 TO .250" TAB PER E950049.
2	07/06/95	JCJ		MADE CHANGES ON FUSE PER ECO# E0109
1	03/30/95	JCJ		CHG'D Q20 FROM J176 TO J175 PER ECO# E0635

SIGNATURES:		DATE:
DRAWN:	MGA	11/01/94
CHK'D:	TEK	03/15/97
APP'D:	TEK	03/15/97
ORIGINAL ISSUED:		
PLOT DATE:		10/07/97
PLOT TIME:		14:16:08
FILE NAME:		24111P8_

SLM Electronics
11880 BORMAN DR.
ST. LOUIS, MISSOURI
63146

PROJECT NAME: GX-120/GX-212 GUITAR AMP

DRAWING NAME: PICTORIAL

DRAWING NO. 07-241-11 REV. 8

SCALE: 1:1 SHEET: 1 OF 2

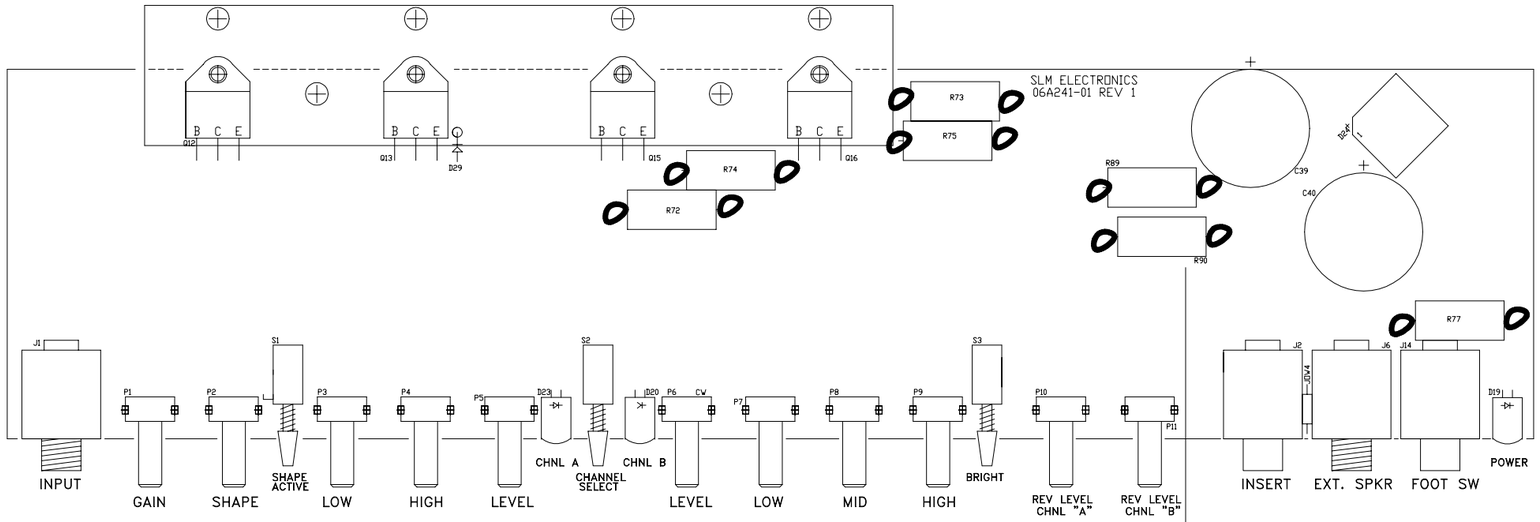

THESE PARTS TO BE GOOPED ON THE LEADS ONLY. GOOP PER STANDARD GOOPING PRACTICE.

SEE SHEET 1 OF 2 FOR REVISION HISTORY

SIGNATURES:		DATE:
DRAWN:	MAG	03/15/97
CHK'D:	TEK	11/14/94
APP'D:	TEK	11/14/94
ORIGINAL ISSUED:		
PLOT DATE:		10/07/97
PLOT TIME:		14:16:08
FILE NAME:		24111P8_

SLM Electronics
11880 BORMAN DR.
ST. LOUIS, MISSOURI
63146

PROJECT NAME: GX-120GX-212 GUITAR AMP

DRAWING NAME: GOOP

DRAWING NO. 07-241-11 REV. 8

SCALE: 1:1 SHEET: 2 OF 2