SYSTEM WIRING DIAGRAMS
Exterior Lamps Circuit (2 of 2)

1997 Honda CR-V

For DIAKOM-AUTO http://www.diakom.ru Taganrog support@diakom.ru (8634)315187
Copyright © 1998 Mitchell Repair Information Company, LLC
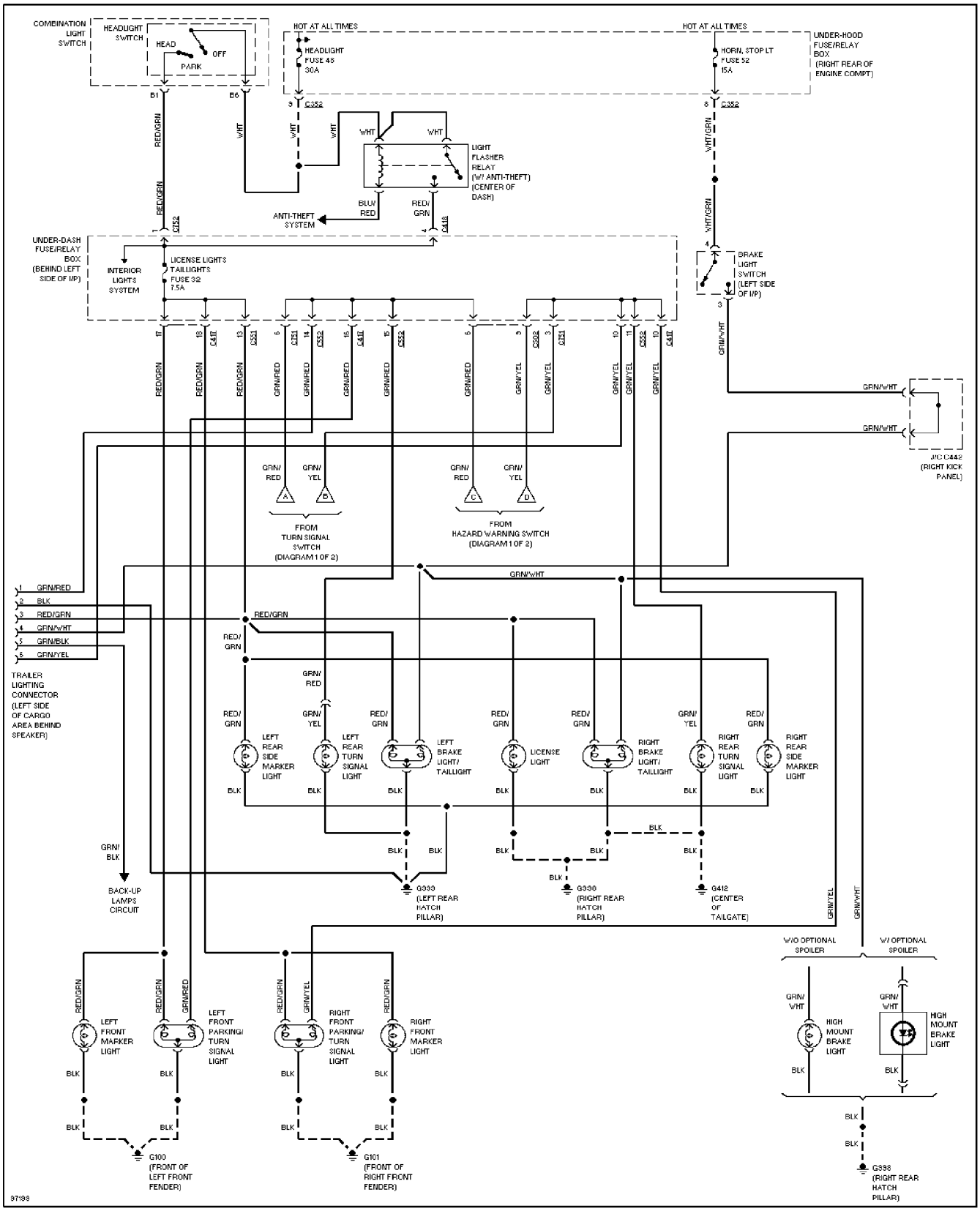
Saturday, December 23, 2000 05:41PM