SYSTEM WIRING DIAGRAMS
Cruise Control Circuit
1997 Honda CR-V

For DIAKOM-AUTO http://www.diakom.ru Taganrog support@diakom.ru (8634)315187

Copyright © 1998 Mitchell Repair Information Company, LLC
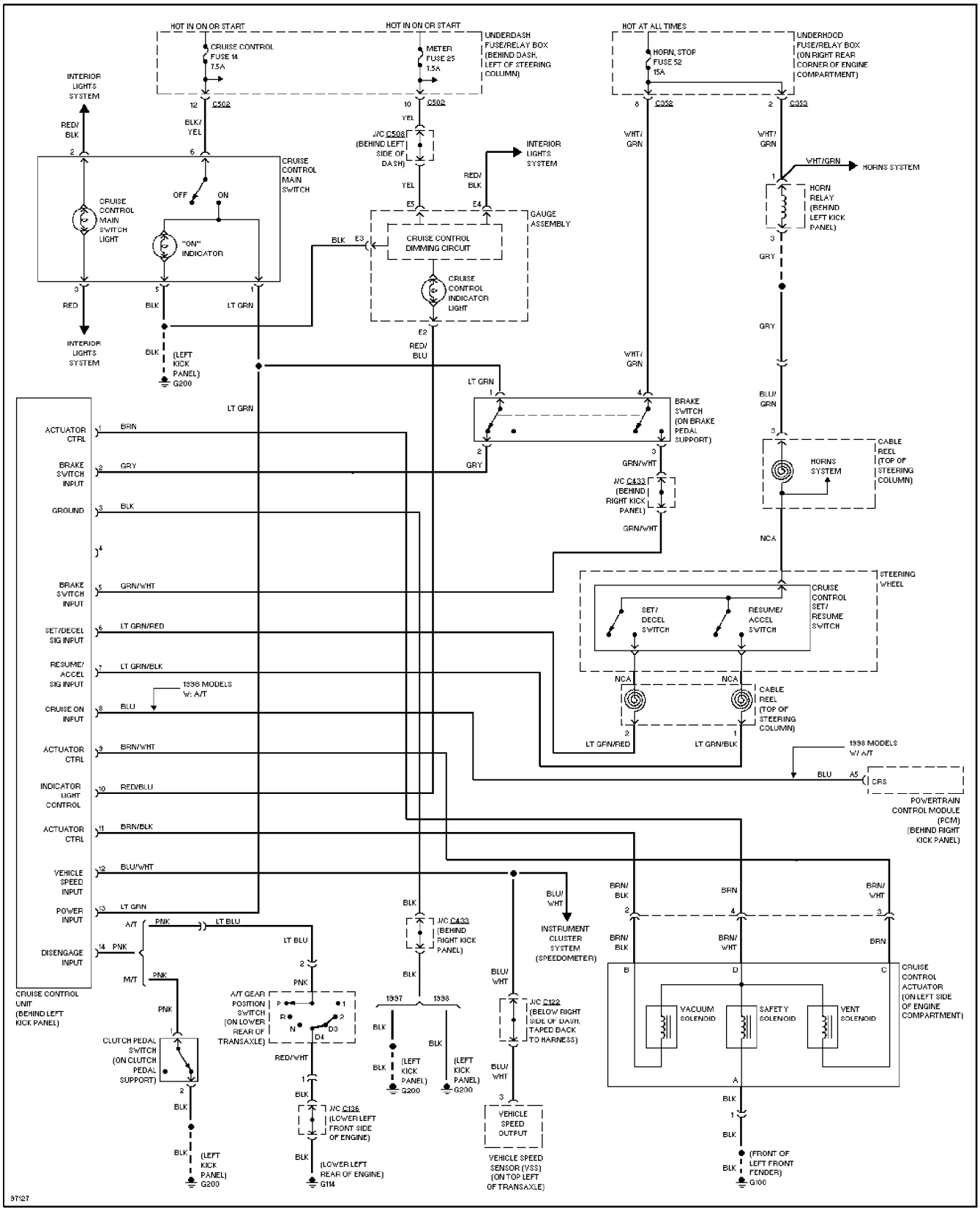
Saturday, December 23, 2000 05:39PM