apple service

LEVEL I
TECHNICAL PROCEDURES
#072-0062
VOLUME III

Level 1

Technical Procedures

Volume III

#072-0062

Copyright 1983 by Apple Computer, Inc.

Revision: July 1984

TECHNICAL PROCEDURES MANUAL

July, 1986 Edition

TABLE OF CONTENTS - VOLUME THREE

Multi-Product Diagnostics
- --Table of Contents 1/86
- --Apple II Peripherals Diskette 1/86
  - (except pages 1.2-1.6, 1.11) 2/86

Modems
- --Table of Contents 7/86
- --300/1200 Modems Troubleshooting and Take-Apart 1/84
  - (except page 1.1) 10/85
  - (except page 1.9) 2/85
- --300/1200 Modems Illustrated Parts List 4/85
  - (except page 2.0, 2.1) 10/85
- --Apple Personal Modem 10/85
  - (except pages 3.2, 3.3) 5/86
- --Apple Personal Modem Illustrated Parts List 7/86

Miscellaneous Illustrated Parts 9/85
- (except page 1.5) 3/86

ImageWriter
- --Table of Contents 7/86
- --Introduction 8/83
  - (except pages 1.7, 1.8) 4/86
- --Take-Apart 8/83
  - (except pages 2.9, 2.13, 2.21, 2.25 2.27, 2.29, 2.31, 2.35) 3/84
  - (except pages 2.38, 2.39) 11/85
- --Troubleshooting 8/83
  - (except page 3.1, 3.6, 3.7) 7/86
  - (except pages 3.4) 4/86
  - (except pages 3.5) 11/85
- --TS Flow of Information - Appendix 3A 7/86
- --Illustrated Parts List 4/85
  - (except pages 4.4, 4.5, 4.7) 4/86
  - (except page 4.6) 7/86
  - (except page 4.8) 7/85
  - (except page 4.10) 11/85
  - (except pages 4.12, 4.13) 2/86
- --15-Inch Take-Apart 3/84
- --Appendix 4/85

ImageWriter II

--Table of Contents	7/86
--Basics	10/85
(except page 1.7)	4/86
--Troubleshooting	10/85
(except pages 2.1, 2.9, 2.12, 2.13, 2.18, 2.19)	7/86
(except pages 2.2, 2.6)	4/86
--Take-Apart	10/85
(except pages 3.1, 3.18, 3.19, 3.59, 3.60, 3.61)	7/86
(except pages 3.15, 3.17, 3.37, 3.43)	2/86
(except pages 3.27, 3.29, 3.47-3.49, 3.56-3.58)	4/86
(except pages 3.49-3.55)	3/86
--Adjustments	10/85
(except page 4.1, 4.2, 4.3)	7/86
--Sheet Feeder	11/85
--Illustrated Parts List	11/85
(except pages 6.1, 6.3, 6.22, 6.23, 6.26, 6.27, 6.36, 6.37)	5/86
(except pages 6.8-6.10)	4/86
(except page 6.14)	3/86
(except pages 6.15, 6.29)	2/86
--Sheet Feeder Illustrated Parts List	12/85
(except page 7.3)	5/86
--Appendix A	10/85

TECHNICAL PROCEDURES MANUAL

August, 1985 Edition

TABLE OF CONTENTS - VOLUME III

Graphics Tablet	
--Table of Contents	4/85
--Apple //e Installation	8/08/83
--Apple][or //Plus Installation	8/08/83
--Troubleshooting	8/08/83
(except 3.1, 3.3, 3.4)	8/84
--RFI Upgrade Procedures	8/84
--Illustrated Parts List	6/85
(except 5.1, 5.2)	7/85
Keyboards	
--Table of Contents	5/84
--Keyswitch Replacement	9/03/82
--Keyswitches Used on Apple Computers	5/84
Power Supplies	
--Power Supply replacement for Apple][	8/22/83
Numeric Keypad	
--Table of Contents	4/85
--Troubleshooting	12/03/82
(except page 1.3)	10/23/84
--Assembly/Disassembly	12/03/82
--Illustrated Parts List	4/85
(except 2.1, 2.2)	7/85
Apple Color Plotter	
--Table of Contents	4/85
--Troubleshooting	9/26/83
--Setup and Configuration	9/26/83
--Take-apart	9/26/83
--Illustrated Parts List	4/85
Modems	
--Table of Contents	4/85
--Troubleshooting and Take-apart	1/30/84
(except page 1.9)	2/85
--Illustrated Parts List	4/85

Monitor II

--Table of Contents	6/85
--General	10/84
--Take-apart	5/84
(except 2.5)	10/84
(except 2.3, 2.7, 2.13)	7/85
--Adjustments	5/84
(except 3.3)	6/85
--Troubleshooting	5/84
(except 4.1,4.5,4.6)	6/85
--Illustrated Parts List	4/85
(except 5.1, 5.2)	8/85

AppleColor Monitor 100

--Table of Contents	3/85
(except page 0.2)	8/84
--General	8/84
(except page 1.2)	2/85
--Take-Apart	8/84
(except pages 2.1, 2.10, 2.11,2.35)	3/85
(except 2.7)	6/85
(except pages 2.8, 2.9)	7/85
(except pages 2.26-2.29,2.34)	2/85
--Adjustments	8/84
(except page 3.9)	2/85
--Troubleshooting	8/84
(except page 4.2)	2/85
--Illustrated Parts List	4/85
(except pages 5.1, 5.2)	7/85

Apple //c Flat Panel Display

--Table of Contents	4/85
--Troubleshooting	1/85
--Diagnostics	1/85
--Take-Apart	1/85
--Illustrated Parts List	4/85

Apple Monitor //c

--Table of Contents	4/85
--Serial Number Transfer	3/85
(except page 1.1)	7/85
--Illustrated Parts List	4/85

Miscellaneous Illustrated Parts 6/85

SERVICE AND SUPPORT NOTICE

GRAPHICS TABLET (RFI)

A. OVERVIEW

The new Apple Graphics Tablet RFI (Product #A2M2007) is an electronic "drawing board" for creating computer graphics and pictures. The new Graphics Tablet is functionally identical to the original non-RFI Graphic Tablet (Product # A2M0029). Minor changes have been made to the Graphics Tablet to meet FCC regulations regarding Radio Frequency Interference. No changes have been made to the software/firmware that would make the new tablet incompatible with software developed for the original tablet. Software is in a 16-sector format.

B. SERVICE AND SUPPORT

The Graphics Tablet RFI may be serviced by **modular exchange only.**

A Graphics Tablet RFI assembly consists of the following components:

1. Apple Graphics Tablet with RFI-shielded cable,
2. Graphics Tablet pen with 6 ft. RFI-shielded connector cable,
3. Graphics Tablet Interface Card,
4. RFI-shielded mounting clamps and cable assemblies for an Apple //.

C. SERVICE TRAINING

There is no formal service training required to sell and support the Apple Graphics Tablet RFI.

D. ORDERING PARTS

All dealers selling the Graphics Tablet (RFI) must purchase the Graphics Tablet Spares Kit (RFI) (P/N 652-0530; Dealer Cost $255.00; Suggested Retail Price $340.00). The Graphics Tablet RFI Spares Kit includes:

Service Stock	Part #	Retail	Dealer
G/T Interface Card-RFI	661-91141	$ 84.00	$ 63.00
G/T Stylus-RFI	661-91142	104.00	78.00
Replacement Parts	**Part #**	**Retail**	**Dealer**
Internal Cable Assy-RFI	590-0085	20.00	15.00
Internal Stylus Cable-RFI	590-0102	24.00	18.00
G/T Overlay Assembly	825-0039.	20.00	15.00
Other Parts	**Part #**	**Retail**	**Dealer**
G/T Installation Hardware	600-8010	18.00	13.50
Clamp, Rear Interface	805-0085	2.40	1.80
Clamp, Front	805-0105	10.00	7.50
Tools/Diagnostics	**Part #**	**Retail**	**Dealer**
Magnet	076-0008	60.00	45.00
Plastic Sheet	076-0010	8.00	6.00
Tweeking Tool	076-0025	0.80	0.60
Pen Alignment Block	076-0009	4.00	3.00
Cloth, Anti-Static	919-0001	1.00	0.75

Exchange Module prices are as follows:

Exchange Modules	Part #	Retail	Dealer
G/T Assembly-RFI	665-91140	$ 100.00	$ 75.00
G/T Interface Card-RFI	665-91141	44.00	33.00
G/T Stylus-RFI	665-91142	40.00	30.00

E. WARRANTY AND APPLECARE

The customer should incur no charges for repair of a Graphics Tablet IF the unit is covered under 90 Day Limited Warranty or an AppleCare Carry-In Service Agreement.

A one year AppleCare Carry-In Service contract for the Graphics Tablet is available for:

Part Number	Suggested Retail	Dealer Cost
SC20006	$ 48.00	$ 31.00

Dealers will be reimbursed for warranty and AppleCare repairs as follows:

Warranty and AppleCare Labor Reimbursement Fee.....$25.00 per product.
\+ Suggested Retail Price of Modules and Replacement Parts used.

The Reimbursement Fee paid on Exchange Modules is also the suggested labor charge for out-of-warranty repairs.

apple computer inc.

GRAPHICS TABLET TECHNICAL PROCEDURES

TABLE OF CONTENTS

Section 1. Apple //e Installation

Section 2. Apple][or Apple //-Plus Installation

Section 3. Troubleshooting

apple computer inc.

Graphics Tablet Technical Procedures

Section 1

Apple //e Installation

CONTENTS:

Connecting the Internal Cables to the Interface Card.....1.3
Inserting the Interface Card.....1.4
Attaching the Cables to the Back Panel.....1.4

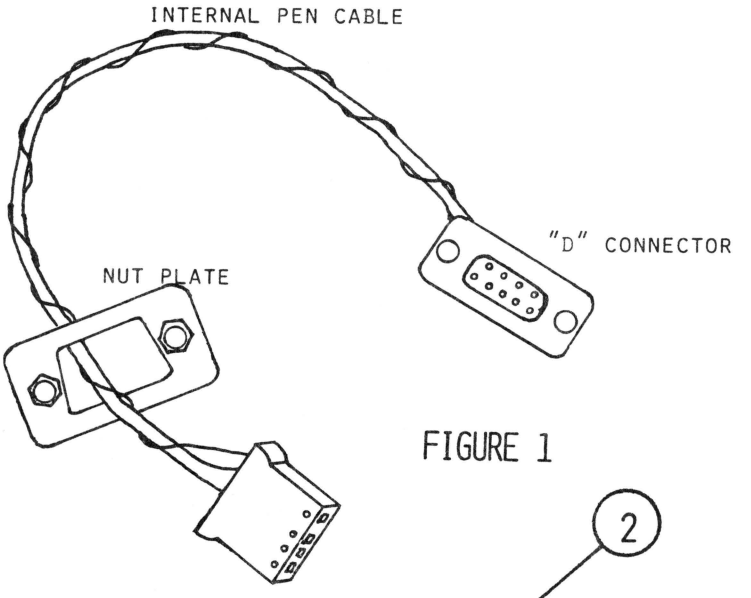

FIGURE 1

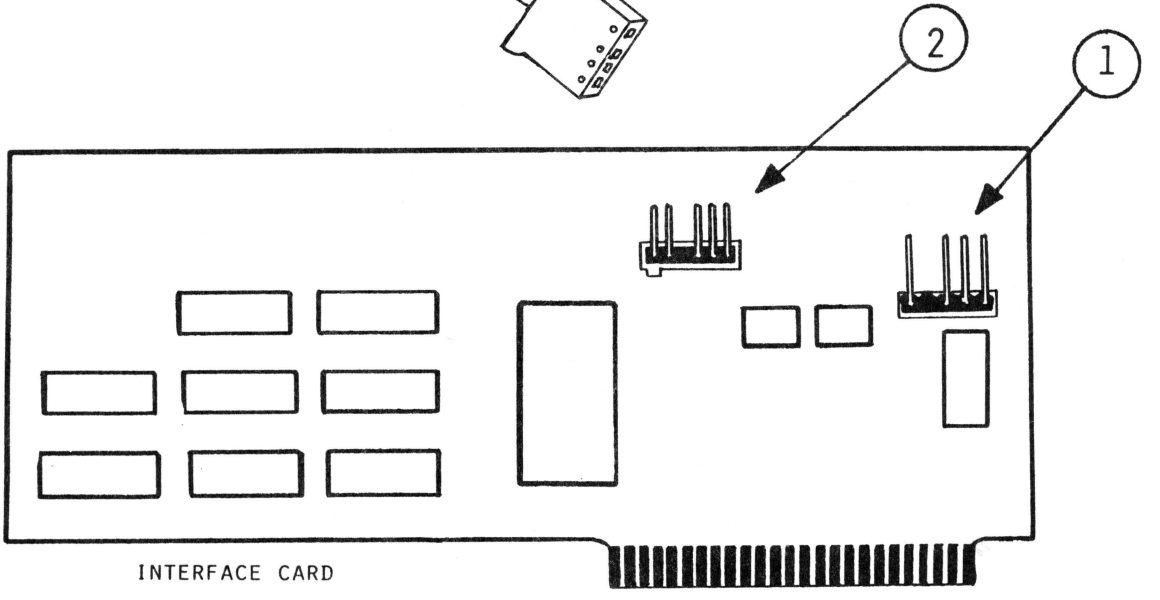

FIGURE 2

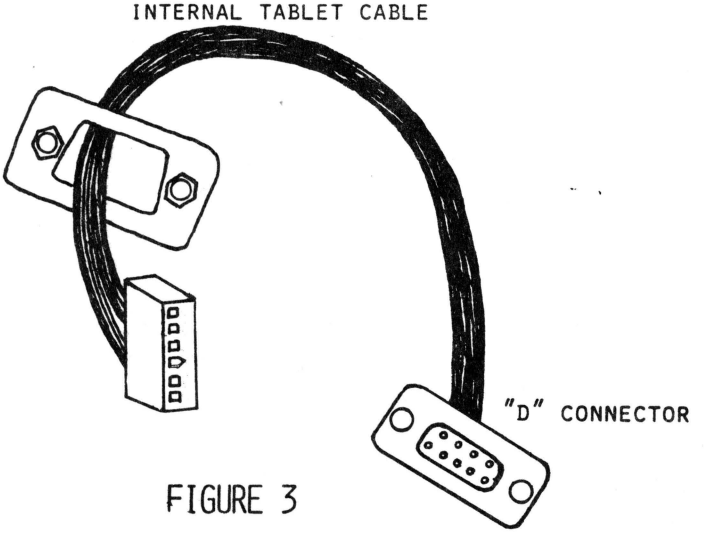

FIGURE 3

apple computer inc.

INTRODUCTION

The new Graphics Tablet RFI is functionally identical to that of the NON-RFI Graphics Tablet, A2M0029. Minor changes have been made to meet EMI specifications required by the FCC.

EQUIPMENT REQUIRED

To install the Graphics Tablet on an Apple //e you will need:

- o Small flatblade screwdriver
- o Two nut plates
- o Four hexagonal-head screws
- o The small wrench that comes with the Graphics Tablet

NOTE: The large, gray-metal, two-piece connector clamp that comes with the interface card is not needed for Apple //e installation. It is only used with earlier models of the Apple][.

A. CONNECTING THE INTERNAL CABLES TO THE INTERFACE CARD

1. Find the internal pen cable and one of the nut plates (see Figure 1). This cable has a "D"-shaped connector at one end and a small slip-on connector at the other end with four holes in it. Put the slip-on connector through the nut plate, with the nuts facing away from the "D"-shaped connector.

2. Locate a set of four pins near the top right edge of the interface card (see Figure 2, #1) and slide the slip-on connector onto the pins.

3. Now find the internal tablet cable and put its slip-on connector through the nut plate, with the nuts facing away from the "D"-shaped connector (See Figure 3).

4. Slide this connector onto the second set of pins (see Figure 2,#2) on the interface card to the left of the first cable you connected.

B. INSERTING THE INTERFACE CARD

1. Unplug the power cord from the back of the computer.

2. Remove the cover of the Apple computer. You will install the interface board into one of the expansion slots at the back of the main board. The slots are numbered from 1 to 7 with slot 1 nearest to the power supply case. The interface card will work properly in any slot except slot 3. Slot 5 is a good choice because it's near the location where the "D" connectors will be installed on the back of the computer.

3. Insert the interface card into slot 5.

C. ATTACHING THE CABLES TO THE BACK PANEL

1. Now turn the computer around and look at the back panel. You'll see several numbered openings with rectangular plugs in them. Openings 5 and 6 will be used for the Graphics Tablet connectors (actually, any of the openings may be used as long as they are the same size). Remove the hole plugs in openings 5 and 6 by presssing down and out on the plastic tab on the back of each plug.

2. Slide the nut plate up the tablet internal cable until it's right up against the "D"-shaped connector. The tablet internal cable is the one connected closest to the middle of the interface card.

3. Next put the connector and nut plate up against the bottom opening in the back panel (opening 6). The connector should be in direct contact with the back panel, the nut plate should be directly behind the connector, and the part of the connector with the nine holes in it should be protruding through the opening.

4. Now insert the hexagonal-head screws from outside the computer through the notches above and below the opening in the back panel, then through the holes in the connector, and finally through the holes in the nut plate. Tighten the screws with the wrench that came in the Graphics Tablet package.

5. Plug the cable from the Graphics Tablet into the internal cable connector. Finish the connection by tightening the two screws.

6. Now attach the internal pen cable to opening 5 on the back panel.

7. Next plug the external pen cable into the internal pen connector. Tighten the two screws.

8. Double-check all of the connections you've made, using this list:

   - the internal tablet cable is attached to the external tablet cable
   - the internal pen cable is attached to the external pen cable
   - the interface card is firmly seated
   - the "D"-shaped connectors are firmly plugged in and the screws are tightened down

9. Put the cover back on the computer.

apple computer inc.

Graphics Tablet Technical Procedures

Section 2

Apple][or Apple //-Plus Installation

CONTENTS:

Attaching the Internal Cables to the Connector Clamp.....2.3
Connecting the Internal Cables to the Connector Card.....2.5
Installing the Connector Clamp.....2.6
Inserting the Interface Card.....2.6
Connecting the Internal and External Cables.....2.6

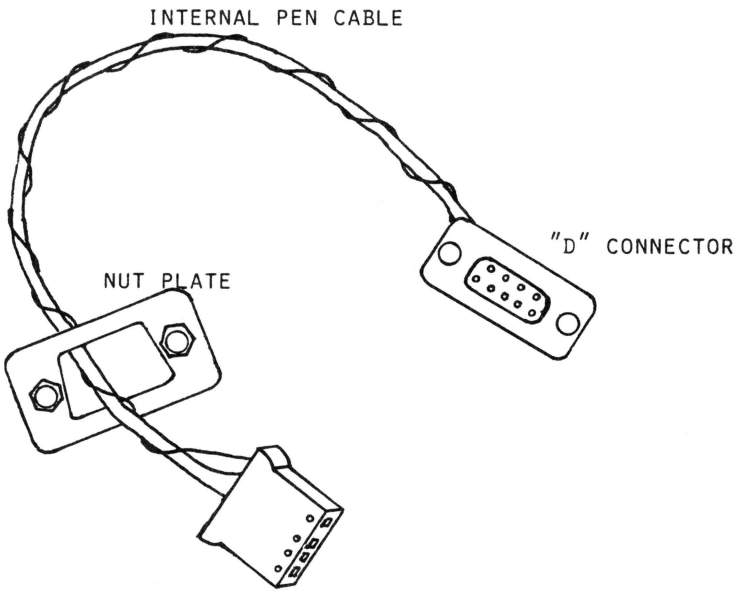

FIGURE 1

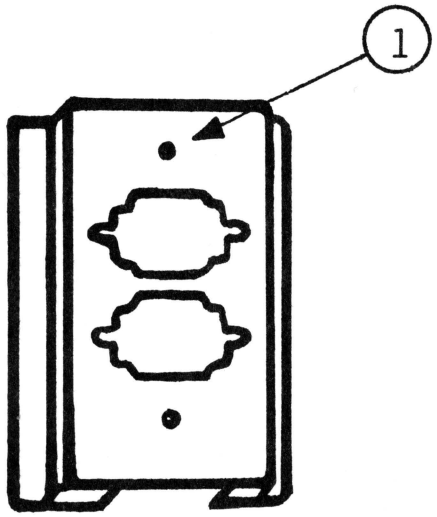

FIGURE 2

apple computer inc.

INTRODUCTION

The new Graphics Tablet is functionally identical to the non-RFI Graphics Tablet, A2M0029. Minor changes have been made to meet the EMI specifications required by the FCC.

EQUIPMENT REQUIRED

To install the Graphics Tablet on an Apple][or // Plus you'll need these items:

- The large, gray-metal, two-piece clamp that comes with the Graphics Tablet
- Two nut plates
- Two Phillips-head screws
- Four hexagonal-head screws
- The small wrench that comes with the Graphics Tablet
- Small Phillips screwdriver
- Small flat blade screwdriver

A. ATTACHING THE INTERNAL CABLES TO THE CONNECTOR CLAMP

1. Find the internal pen cable and one of the nut plates (See Figure 1). This cable has a "D"-shaped connector at one end and a small slip-on connector at the other end with four holes in it. Put the slip-on connector through the nut plate, with the nuts facing away from the "D"-shaped connector.

2. Find the front piece of the two-piece connector clamp (See Figure 2). The top is the end where the screw hole is nearer the edge (see Figure 2,#1). Put the "D"-shaped connector and nut plate right up against the top opening. The connector should be in direct contact with the clamp, the nut plate should be directly behind the connector, and the part of the connector with the nine small holes in it should be protruding through the opening in the clamp.

3. Attach the connector and the nut plate to the clamp by putting the hexagonal-head screws through the front of the clamp, then through the holes in the "D"-shaped connector, and finally through the nut plate. Tighten down the screws with the small wrench that came with the Graphics Tablet.

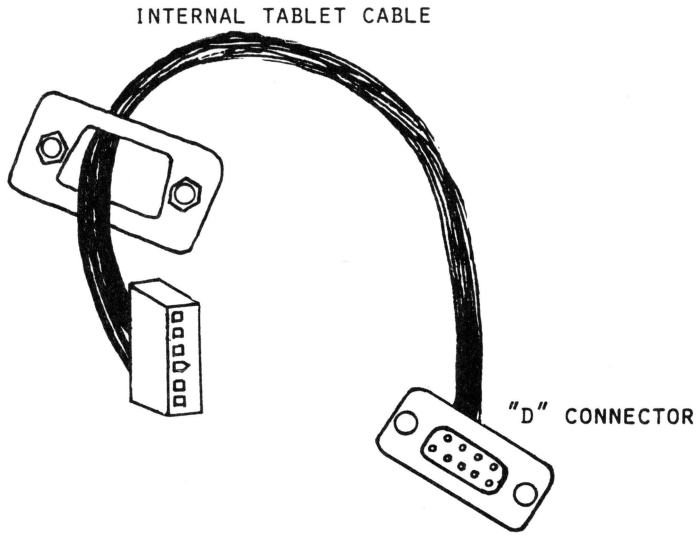

FIGURE 3

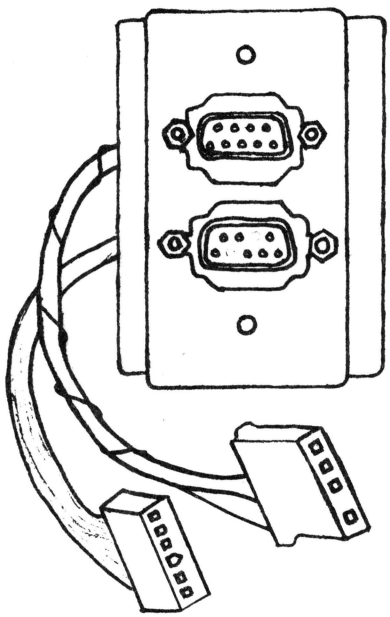

FIGURE 4

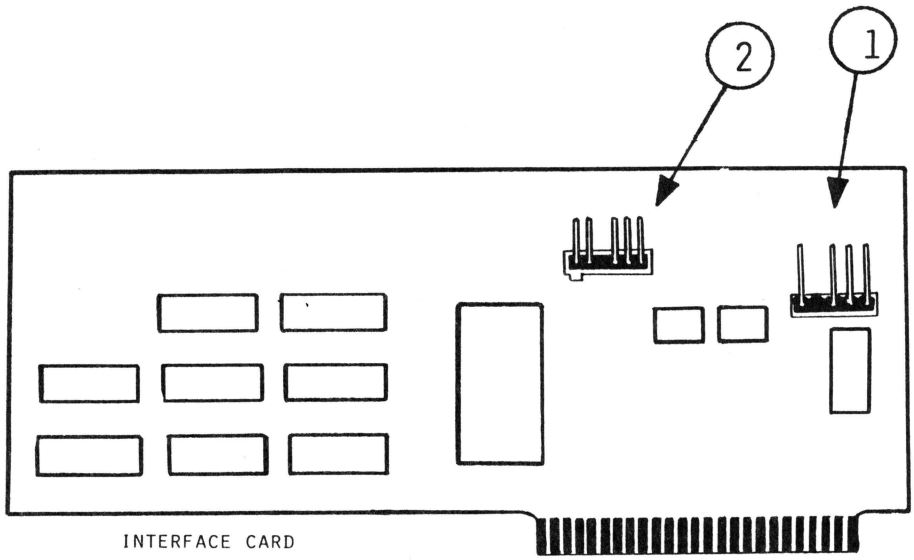

FIGURE 5

4. Now find the internal tablet cable (see Figure 3). It has a slip-on connector with six small holes on one end. Slide the slip-on connector through the other nut plate, making sure that that the nuts are facing away from the "D"-shaped connector.

5. Attach the connector and nut plate, as you did in steps 2 and 3, to the bottom opening of the connector clamp. The assembled connectors are shown in Figure 4.

6. Now that the connectors are attached to the front of the clamp, fit the two clamp pieces together to form a "box" and put the two internal cables through the side opening on the back of the clamp. Make sure the screw holes line up. Attach the two clamp pieces with two Phillips head screws. Don't tighten the screws completely yet.

B. CONNECTING THE INTERNAL CABLES TO THE INTERFACE CARD

1. The internal pen cable should now be attached to the top cutout in the connector clamp. Check to see that the small slip-on connector at the end has four holes.

2. Locate a set of four pins near the top right edge of the interface card (see Figure 5, #1) and gently slide the slip-on connector onto the pins.

3. Now find the Graphics Tablet internal cable. It should be attached to the bottom cutout on the front of the connector clamp.

4. Slide the end with the slip-on connector onto the second set of pins (see Figure 5,#2) on the interface card to the left of the first cable you connected.

C. INSTALLING THE CONNECTOR CLAMP

1. Unplug the power cord from the back of the computer and remove the cover.

2. Look at the back panel of the computer. The connector clamp will be installed into one of the three deep vertical notches. Take the connector clamp and slide it down as far as it will go into one of the notches. If you have trouble sliding the connector down into the notch, loosen the two Phillips head screws and then push it down into the slot. Now tighten the screws that hold the clamp assembly together until the clamp can no longer be moved in the opening.

D. INSERTING THE INTERFACE CARD

1. You will install the interface card in one of the expansion slots. The slots are numbered from 0 to 7 with slot 0 nearest to the power supply. The interface card will work properly in any slot except slot 0. Insert the interface card into a slot near the connector clamp.

E. CONNECTING THE INTERNAL AND EXTERNAL CABLES

1. Now find the cable attached to the Graphics Tablet pen and plug it into the top connector. Complete the connection by tightening the screws on the external pen connector.

2. Plug the connector on the cable attached to the Graphics Tablet into the bottom connector. Complete the connection by tightening the screws on the external tablet connector.

3. Double-check all of the connections you've made, using this list:

   - the internal tablet cable is attached to the external tablet cable
   - the internal pen cable is attached to the external pen cable
   - the interface card is firmly seated
   - the "D"-shaped connectors are firmly plugged in and the screws are tightened down

4. Put the cover back on the computer.

apple computer inc.

GRAPHICS TABLET TECHNICAL PROCEDURES

SECTION 3

TROUBLESHOOTING

CONTENTS

Symptom Table.....3.2
Pen Alignment.....3.3
Checking The Tablet.....3.4

apple computer inc.

SYMPTOM TABLE

CAUTION: Diskettes and video tapes can be erased by the magnetism of the Graphics Tablet or biasing magnet. Do not store diskettes or video cassettes on or near the Graphics Tablet or biasing magnet.

SYMPTOM	CORRECTIVE ACTION
MONITOR DISPLAYS: "NOT DETECTING INTERFACE CARD"	1. Check interface card firmly seated 2. Clean card contacts ("fingers"). 3. Replace interface card.
UNABLE TO DRAW OR SELECT MENU COMMANDS WITH THE PEN	1. Swap the following components in this order: • Interface card • External pen cable • Internal pen cable • Internal Tablet cable • Graphics tablet
APPLE //e "BEEPS" WHEN TYPING GRAPHICS TABLET COMMANDS	1. Press the "CAPS LOCK" key and retype the command. Apple //e will not accept lower case commands with the graphics tablet software.
ERRATIC DRAWING: EXTRA OR MISSING DOTS	1. Wipe the tablet surface and the menu with the anti-static cloth **CAUTION:** When using the biasing magnet, keep the magnet away from diskettes and video tapes. A magnetic field can erase information. 2. With power off, draw the biasing magnet across the surface using a slow continuous motion in a single direction. Do this for each direction; left to right, top to bottom, and diagonally. 3. Boot the Graphics Tablet Software diskette. 4. Select MENU ALIGNMENT and follow the instructions on the monitor. **NOTE:** If the tablet does not pass the MENU ALIGNMENT procedure perform the following procedure, PEN ALIGNMENT.

PEN ALIGNMENT

To perform this procedure, you will need the following:

- Apple II Products Diagnostic Diskette
- Pen alignment block
- Nylon coil adjustment tool
- Sheet of 1/8" plexiglass
- Anti-static cloth

1. Boot the Apple II Products Diagnostic diskette (16 sec).

2. Select CARD TESTS from the GRAPHICS TABLET TEST

NOTE: To avoid confusion follow the instructions given here rather than the instructions displayed on the screen, as they sometimes refer to things you should do after you have pressed ESC to proceed to the next screen.

3. Press ESC and wait for the ROM test. If the ROM test fails, replace the interface card.

4. Press ESC.

5. Place the pen in the wooden alignment block.

6. Place the alignment block so that the pen is between the eighth and ninth lines (counting the top border of the graph as line 1) in the column called "dots".

7. Press ESC twice.

8. Insert the nylon coil adjustment tool into the top of L2 (upper left corner of the interface card) and turn the slug counterclockwise until it is even with the top of the sleeve; then turn it clockwise until the crosshairs stabilize in the middle box. Continue to turn until they disappear again.

9. Now turn it counterclockwise again until the crosshairs first stabilize within the middle box.

10. Look straight down on the top of the tool and notice what direction the blade is pointing in.

11. Now continue to turn the tool counterclockwise.

12. When the crosshairs lose stability and jump out of the box, restabilize them, then look at the top of the tool and note which direction the blade points.

13. The correct setting is halfway between the two points at which the crosshairs stabilize.

CHECKING THE TABLET

With the surface biased, the menu aligned, and the pen aligned, you must check the tablet to see if there are any troubles that have not been corrected.

1. Press ESC three times.

2. Wipe both sides of the sheet of 1/8" plexiglass with the anti-static cloth.

3. Place the plexiglass over the menu and with a straight edge (don't use metal), draw lines around the edges, through the middle, and diagonally. There should be no gaps, double lines, "glitches", or extraneous dots. If there are, repeat the biasing procedures, and wipe the surfaces with the anti-static cloth.

4. If there are still missing or extra dots,the unit should be sent to Level II Service Center.

Keyboards

apple computer

SERVICE AND SUPPORT NOTICE

DATANETICS KEYBOARDS

(File this notice in your Level 1 Technical Procedures binder, behind the Keyboards tab, in front of the Table of Contents.)

Effective January 17, 1984, Datanetics keyboards for the Apple][,][Plus, and /// are no longer supported with parts: that is, replacement keyswitches can no longer be ordered. All Datanetics keyboards that come in for repair should be returned to Apple using normal procedures for exchange modules. They will be replaced with equivalent **supported** keyboards.

To identify a Datanetics keyboard, look for the name "Datanetics" on the PCB. All single-piece (rev 0) Apple][keyboards are Datanetics keyboards.

The part numbers involved are as follows:

Datanetics KB Description	Part Number	May Be Replaced with
Apple][, rev 0 (single-piece)*	661-91020	661-91075 (with non-sculptured keycaps) or 661-91073 (sculptured)
Apple][	661-74024	661-91075 (non-sculptured) or 661-91073 (sculptured)
Apple /// **	661-91022	661-91022 (Alps)

NOTES:

* Single-piece (rev. 0) keyboards will be replaced with two-piece keyboards (with separate keyboard encoder PCB) at no extra cost to you or your customer.

** Both Alps and Datanetics keyboards for the Apple /// have the part number 661-91022. You can tell them apart visually by looking on the bottom of the keyboard. The name "Datanetics" will appear on the bottom of any Datanetics keyboard.

apple computer

KEYBOARD TECHNICAL PROCEDURES

TABLE OF CONTENTS

Section 1: Keyswitch Replacement

Changing a Keyswitch: Screw-fastened Switches.....1.2
Changing a Keyswitch: Snap-on Keys.....1.4

Section 2: Keyswitches Used on Apple Computers.....2.1

NOTE: Apple //e keyboard exchange information is given in the Apple //e Technical Procedures, Appendix A.

apple computer inc.

Keyboards Technical Procedures

Section 1

Keyswitch Replacement

Contents:

Changing a Keyswitch: Screw Fastened Switches.....1.2
Changing a Keyswitch: Snap On Keys.....1.4

apple computer inc.

KEY SWITCH REPLACEMENT PROCEDURES FOR THE APPLE][

For this procedure you will need:

Soldering iron (60 watt, 700 degrees)
Solder sucker
60/40 resin core solder
#1 Phillips screwdriver

Apple]['s have keyboards with three different types of keyswitches: those that screw on, those that snap on, and those that cannot be replaced.

1. Screw-on switches are on keyboards that have both screws and traces on the underneath side of the board of the mechanical assembly.

2. Snap-on switches are on keyboards that have traces but no screws on the underneath side of the board of the mechanical assembly.

3. Keys that are not replaceable are on the newest keyboards which have screws but no traces on the underneath side of the board of the mechanical assembly. If any switch fails, you replace the entire mechanical assembly.

CHANGING A KEYSWITCH: SCREW FASTENED SWITCHES

REMOVING THE KEYSWITCH

1. To determine which key you want to remove, look at Figure A and find the number corresponding to the desired key. Locate that number on the back of the keyboard.

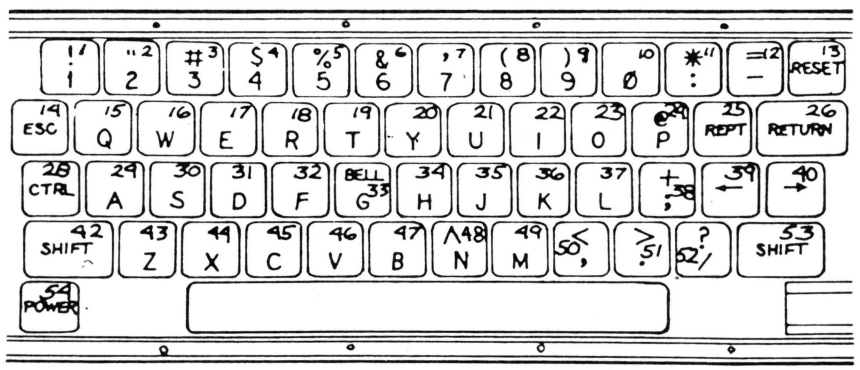

FIGURE A

2. Prepare the solder sucker by pushing the plunger down as far as it will go.

3. Heat the soldering iron and make sure it is clean and well-tinned.

4. When the soldering iron is ready, put a small drop of fresh solder on each connection. This will facilitate melting and removal of the old solder.

5. Hold the soldering iron and the solder-sucker as shown in Figure B. The tip of the iron should be firmly in contact with both the pin and the pad at the base of the pin.

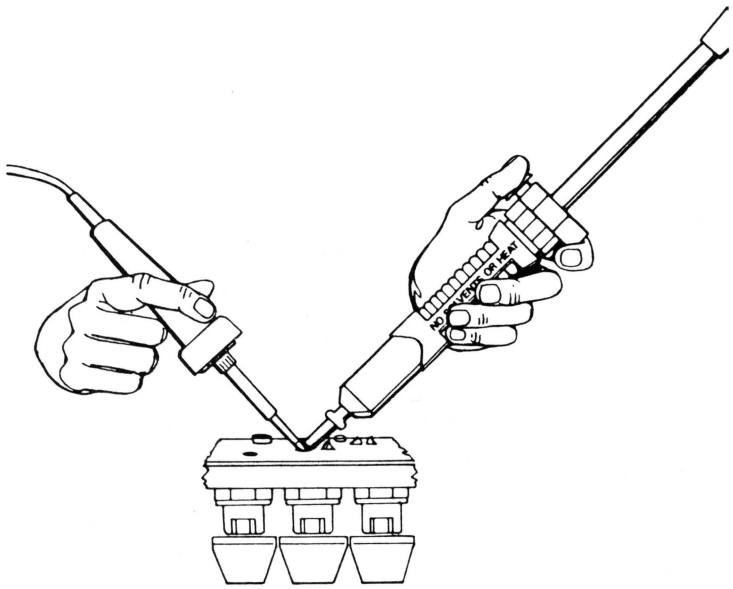

FIGURE B

6. When the solder melts, quickly remove the iron, place the solder sucker vertically over the connection, and push the release button or lever to pick up the solder.

CAUTION: Do not apply the soldering iron for more than three seconds. It may lift the traces off the board and destroy it.

7. Repeat this procedure for the second pin, being careful to observe the 3-second limit.

8. If any solder remains around the base of the pin, apply a little solder to the joint and repeat steps 5 & 6 to make sure all solder is removed.

9. Remove the screw holding the keyswitch to the board.

10. Turn the keyboard right-side up and pull up on the key cap to remove the switch assembly.

INSTALLING THE SWITCH

11. Insert the keyswitch into the board so that the pins go through the holes.

12. Holding the key in place with one hand, turn the keyboard upside-down onto the pad.

13. Reinstall the screw that holds the key in place.

14. Apply a little solder to the iron. Then, with the tip in contact with both the pin and the pad that surrounds the pin hole, apply the new solder.

CAUTION: Don't overheat the board!

15. Check the joint to be sure that the solder has completely filled the hole around the pin and that the solder is built up in a little cone around the pin. If the joint is not filled, apply more solder.

CHANGING A KEYSWITCH: SNAP ON KEYS

REMOVING THE KEYSWITCH

1. Locate the desired key. (See Figure C.)

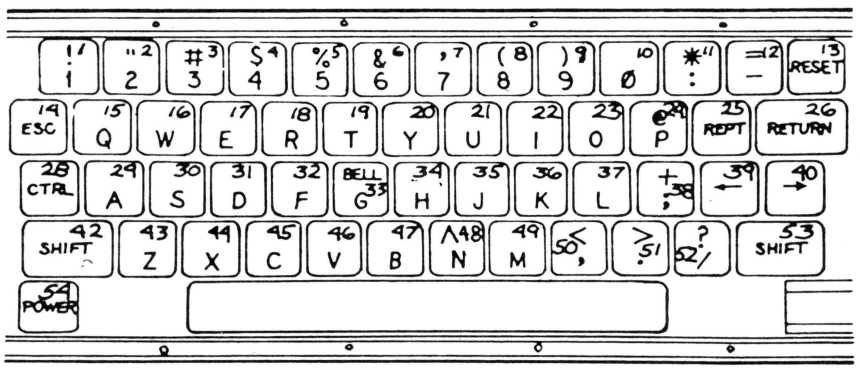

FIGURE C

2. Put a little resin core solder on the joints.

3. Cock the solder sucker by pushing the plunger down as far as it will go.

4. Hold the soldering iron and the solder sucker as shown in Figure D. The tip of the iron should be firmly in contact with both the pin and the pad at the base of the pin.

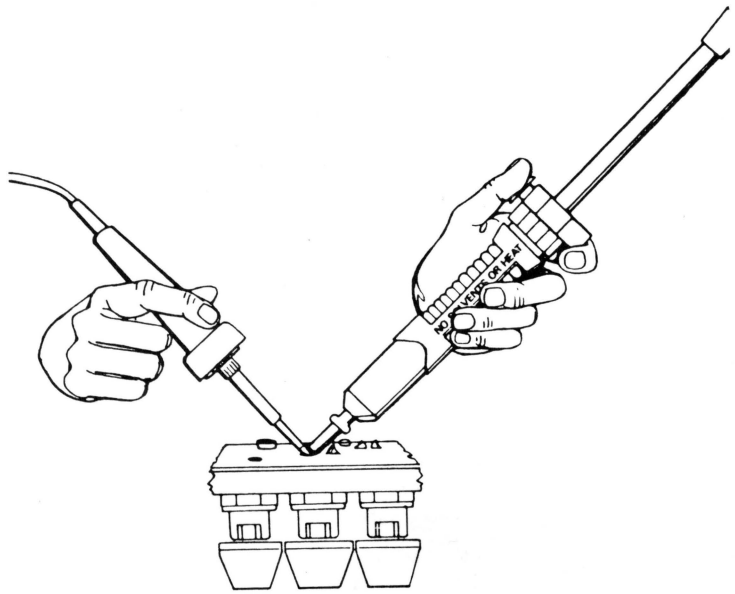

FIGURE D

5. When the solder melts, quickly remove the iron, place the solder sucker vertically over the connection, and push the release button or lever to pick up the solder. Make sure that all the solder is removed.

CAUTION: Do not apply the soldering iron for more than three seconds, It may lift the traces off the board and destroy it.

6. Repeat this procedure for the second pin. Be careful to observe the three second limit.

7. If any solder remains around the base of the pin, apply a little solder to the joint and repeat steps 4-6 to make sure all solder is removed.

8. Turn the keyboard over.

9. Take the key cap off.

10. With one pair of needlenose pliers, pinch the two clips on the keyswitch together.

11. With the other pair of needlenose pliers, remove the keyswitch.

INSTALLING THE SWITCH

12. Thread the pins of the keyswitch through the holes.

13. Snap the switch into place.

14. Replace the keycap.

15. Solder the pins into place. Apply a little solder to the soldering iron. With the tip in contact with both the pin and the pad that surrounds the pin hole, apply the new solder.

CAUTION: Don't overheat the board!

16. Check the joint to be sure that the solder is built up in little cone around the pin. If the joint is not filled, apply more solder.

apple computer

Keyboard Technical Procedures

Section 2

Keyswitches Used on Apple Computers

(Thanks to Apple Canada, Sunnyvale, and Chicago Support Centers, and APG, Garden Grove)

1. Apple II and II Plus Keyboards

A. Datanetics Keyboards (Obsolete)

705-0004
Old Style Keyswitch*

705-0008
Reset

B. Alps Keyboards: 661-91075 (with non-sculptured keycaps)**
661-91073 (with sculptured keycaps)**

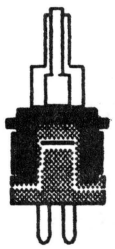

705-0070
Alps Long Stem
("Extended")**

705-0015
Alps Short Stem
(Uses adapter 815-0182 with non-sculptured keycaps; uses adapter 815-0772 with sculptured keycaps)

815-0182
12° adapter
used with short-stem keyswitches and non-sculptured keycaps

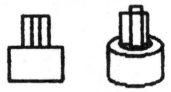

815-0772
Straight adapter
used with short-stem keyswitches and sculptured keycaps

(3-D View)

NOTES

* This switch is no longer available.

** Some Apple II Alps keyboards use extended keyswitches, others use short-stem keyswitches with adapters. The part number of the keyboard depends only on whether the keycaps are sculptured or non-sculptured (flat).

Keyswitches for the *Lisa* are not available.

apple computer

2. Apple //e Keyboards

A. SMK Long Stem Keyboard (661-95233)

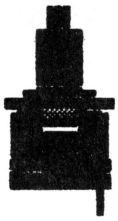

705-0081
SMK Long Stem

Alphanumeric Keys

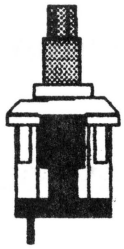

705-0084
SMK Low Friction
Long Stem

Used for Spacebar, Shift; sometimes for Tab, Ctrl, Delete, Return

705-0079
SMK Short Stem

Reset

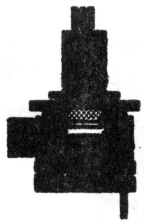

705-0082
SMK Caps Lock
("Alternate Action")
Long Stem

B. SMK Short Stem Keyboard (661-95139)

705-0079
SMK Short Stem
Used with adapter 815-0772

Alphanumeric keys; also used as Reset Key (without adapter).

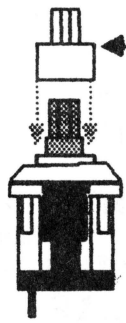

705-0085
SMK Low Friction
Short Stem
Used with adapter 815-0772

Used for Spacebar, Shift; sometimes for Tab, Ctrl, Delete, Return

705-0080
SMK Caps Lock
("Alternate Action")
Short Stem

Apple //e Keyboards (continued)

C. Alps Short Stem (661-95232)

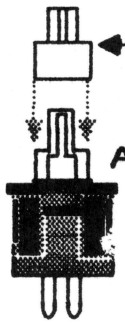

705-0015
Alps Short Stem
Used with adapter
815-0772

705-0077
Alps Alpha Lock
("Alternate Action")

D. Alps Long Stem (661-91085)

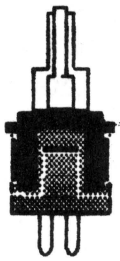

705-0070
Alps Long Stem ("Extended")

705-0077
Alps Alpha Lock
("Alternate Action")

3. Apple /// Keyboard (661-91022)

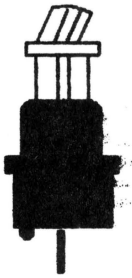

705-0004*

(Datanetics)**

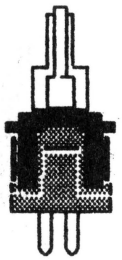

705-0070
Alps Long Stem
("Extended")

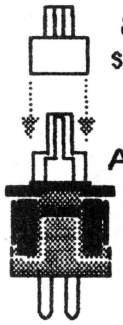

815-0772
Straight adapter

705-0015
Alps Short Stem
Used with adapter
815-0772

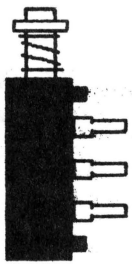

705-0009
Reset

705-0077
Alps Alpha Lock
("Alternate Action")

705-0012
A /// Arrow Keys (Cursor Keys)
("dual action," i.e., two-speed)

Current Version

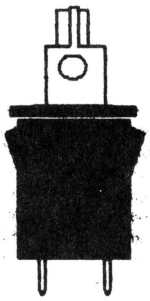

Old Version

NOTES

* This switch is no longer available.

**These keyboards are now obsolete.

4. Macintosh Keyboard (661-96154)

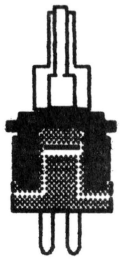

705-0070
Alps Long Stem
("Extended")

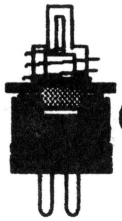

705-0077
Alps Alpha Lock
("Alternate Action")

5. Numeric Keypads

705-0073*

Numeric Keypad II, //e
(older versions, now obsolete)

705-0075
(Alps KEH 10)

Numeric Keypad II, //e

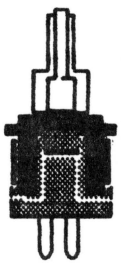

705-0070
Alps Long Stem
("Extended")
Numeric Keypad //e, Macintosh

NOTES

* This switch is no longer available.

Power Supplies

apple computer inc.

POWER SUPPLY TECHNICAL PROCEDURES

TABLE OF CONTENTS

Section 1. Power Supply Switch Replacement for Apple][

Introduction.....1.3
Requirements.....1.5
Procedures.....1.7
Checklist.....1.15

apple computer inc.

Power Supply Technical Procedures

Section 1

Power Supply Switch Replacement for Apple][

Contents:

Introduction.....1.3
Requirements.....1.5
Procedures.....1.7
Checklist.....1.15

INTRODUCTION

NOTE: These procedures are for gold-case power supplies only. Do not attempt to repair silver-case power supplies; replace them with gold-case power supplies.

If an Apple][cannot be turned on (or off), the most probable cause is a power supply problem. You can test this by substituting a known-good power supply in the customer's Apple][; if the problem disappears, you have isolated it to the customer's power supply.

The most common cause of power supply problems is the switch. If the switch cannot be moved, or if it offers no resistance to movement, the switch is probably causing the problem. While you are replacing the switch, you can also check the fuse. The switch and fuse are the only Level 1 replaceable components.

For a summary of the procedures, see p. 1.15.

WARNING: Power supplies store dangerous high voltages and should always be disconnected before being serviced. Even after they are disconnected, power supplies may hold a dangerous voltage. **ALWAYS EXERCISE CAUTION IN REPAIRING POWER SUPPLIES: NEVER PROBE INSIDE A POWER SUPPLY UNNECESSARILY.**

NOTE: This repair is optional at Level 1. With the reduction in the price of the power supply exchange module, it may be more economical, depending upon your equipment and experience, to swap out defective power supplies.

Older model silver-case power supplies lack self-discharging circuits and should not be repaired in any case; always exchange them for gold-case supplies.

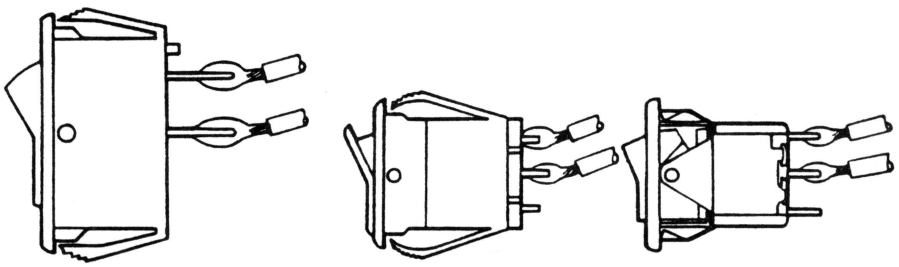

705-0023 705-0001 705-0065

FIGURE 1

REQUIREMENTS

A. Tools:

1. Soldering iron (25 watt) and 63/37 rosin-core solder
2. Needlenose pliers
3. X-acto knife
4. Four-inch diagonal cutters ("dikes")
5. Heat gun
6. Wire stripper (preferably automatic)
7. Pencil eraser
8. Hemostats
9. Portable power drill, with approx. 13/64 inch (.2" or 5mm) diameter bit
10. Vise large enough to hold power supply
11. Safety goggles
12. 1/8 inch center punch or 16-penny nail
13. Hammer
14. Small or medium Phillips screwdriver
15. Small flatblade screwdriver
16. Insulated fuse-puller or equivalent

B. Replacement material and components:

Fuse (Apple Part Number U740-0001)

For power supplies with a large, two-terminal switch,

1. Switch (P/N 705-0023)
2. Shrink tubing, 1/4 inch internal diameter

For those with small, three-terminal switch,

1. Switch (P/N 705-0065)
2. Shrink tubing, 1/8 inch internal diameter

(See Figure 1 for the three types of switch usually found in Apple][power supplies. The small, three-pole 705-0001 (now obsolete) should be replaced with a 705-0065. The large, two-pole 705-0023 must be replaced by another 705-0023.)

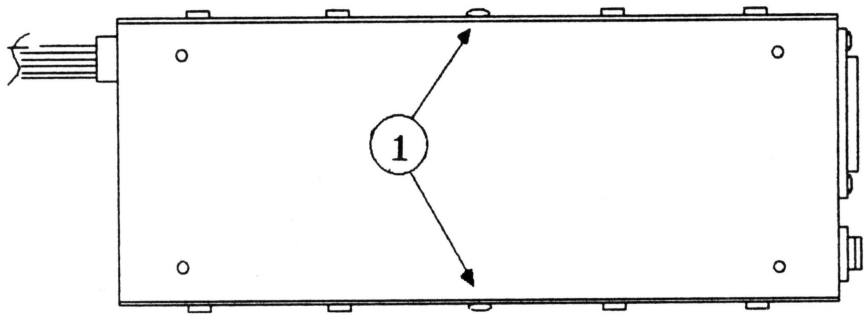

Figure 2

Bottom View of Power Supply

PROCEDURES

0. **BEFORE YOU DO ANYTHING ELSE,** take two 3/4 inch pieces of shrink tubing (1/8 inch internal diameter if working with small switch, 1/4 inch i.d. for large switch), and place or tape them onto the new switch, so that you won't forget to install them before soldering the new switch to the power supply leads.

1. **REMOVE THE POWER SUPPLY FROM THE APPLE**

   a. Power off the Apple][and disconnect the power cord from the power supply.

   b. Unplug the power supply from the motherboard.

   c. Unscrew the power supply from the Apple][baseplate and carefully remove it from the Apple.

2. **REMOVE THE COVER (BOTTOM PLATE) FROM THE POWER SUPPLY**

   NOTE: Some technicians prefer to pry the switch out of the case without removing the cover. If the switch is obviously bad and you choose not to open the case, go directly to step 3.

   a. Locate the two rivets that hold the bottom plate onto the power supply (Figure 2, #1).

   b. Clamp the power supply down firmly in the vise, so that one of the rivetted sides is facing up.

   c. Insert the 13/64 inch bit into the drill chuck and secure it. Put on safety goggles to protect your eyes from metal shavings.

   d. Position the drill bit in the center of the rivet, making sure the drill is aimed straight down into the rivet head. Holding it firmly so that it doesn't slip off the rivet, turn it on at a low speed and drill until the head of the rivet comes off. Do not drill all the way through the rivet or enlarge the hole in the case. Be careful not to scratch the case.

      NOTE: If the rivet is loose and turns with the drill, place the center punch in the hole in the rivet head and hit it with the hammer. This will spread the rivet head so that it grips the sides of its hole.

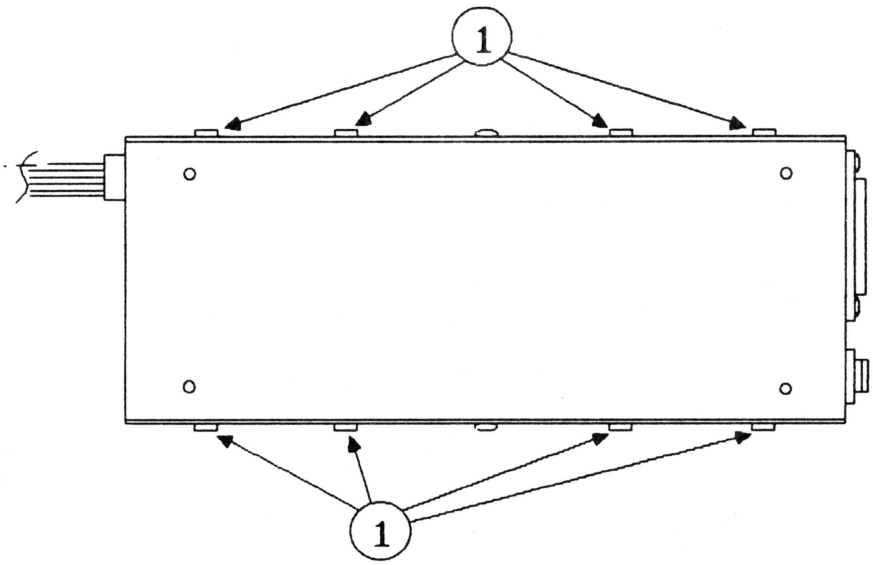

Figure 3

e. Hold the center punch on the rivet and hit it with the hammer until the rivet falls through into the case.

f. Repeat steps d and e for the rivet on the opposite side of the case. Remove the power supply from the vise.

g. Remove the eight screws (four on each side) that hold the bottom plate on (Figure 3, #1).

h. Pry up the bottom plate and set it aside. Be careful not to scratch the case.

i. Turn the power supply over and shake it to remove the rivet fragments. **MAKE SURE YOU FIND BOTH RIVETS.** If you can't find them, loosen (but do not remove) the screws that hold the p.c. board in place and shake until the rivets come out, but to avoid possible shock hazard, NEVER USE YOUR FINGERS TO PROBE INSIDE THE POWER SUPPLY; shake the rivets out of the case.

   If you loosen the PCB screws, be sure to retighten them afterwards.

j. Check the fuse (located near the switch and the power cord plug; usually marked F1 on the p.c. board). If it has blown, use an insulated fuse puller, machinist's scribe or other **INSULATED** tool to pry up one end; then you can remove it with your fingers. (Handle it by its metal ends.) Replace it with another fuse (Apple P/N U740-0001) and test the power supply on a known-good system. If the second fuse blows also, do not attempt further repair. Replace the power supply with an exchange module and send the defective power supply back to Apple.

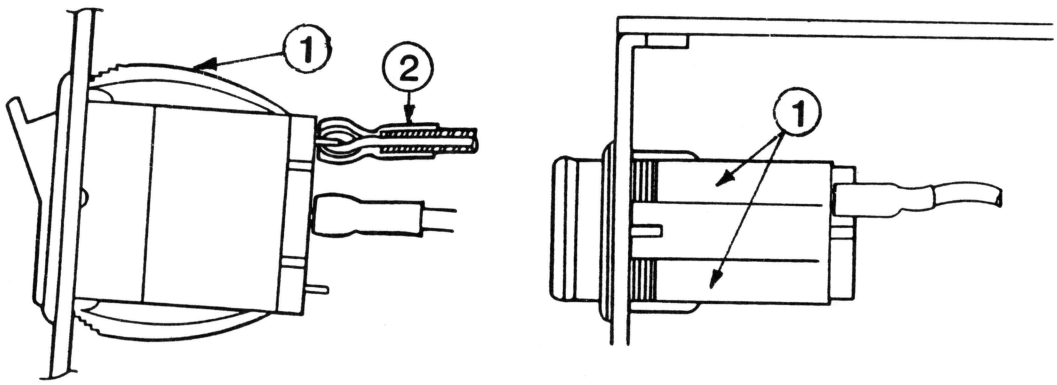

(a) SIDE VIEW (b) TOP VIEW

FIGURE 4

3. REMOVE THE OLD SWITCH

a. **If you have removed the cover,** clip off the two locking tabs (Figure 4, #1) on top of the switch (use diagonal cutters); then push the switch out with your fingers. (If that doesn't work, push the lower locking tabs out of the way with a screwdriver and try pushing again.)

   If you left the cover on, pry the switch out of the case (use screwdriver, assisted by needlenose pliers). Take care not to scratch the case.

b. Strip the shrink tubing (Figure 4a, #2) off the leads (i.e., wires) (use X-acto knife), taking care not to damage the insulation on the leads.

c. De-solder the leads from the switch terminals and discard the switch. (To de-solder, tin the soldering iron [i.e., put a drop of fresh solder on it] and heat the solder joint, while tugging on the switch with your free hand. When the solder melts, pull the lead free.)

   HINT: The leads are very short. If you are working with the cover on, a pair of hemostats, loosely clamped onto the leads, can simplify your job by keeping the leads steady and preventing them from falling back into the case.

4. CLEAN AND PREPARE THE LEADS

a. Clean excess solder from the leads (use soldering iron: either tap it off or draw it off onto the iron).

   NOTE: IF THE LEADS ARE VERY SHORT AND AWKWARD TO WORK WITH, REMOVE THE COVER FROM THE POWER SUPPLY, AS IN STEP 2 ABOVE. IF THEY ARE TOO SHORT TO CONNECT TO THE NEW SWITCH, REPLACE THE POWER SUPPLY.

b. Clip off any badly frayed part of the ends of the leads. (Cut off no more than necessary to create a neat end.)

c. Strip wires to obtain 1/4 inch of stripped wire on each lead. Twist ends to prevent fraying.

d. Tin the end of each lead.

FIGURE 5

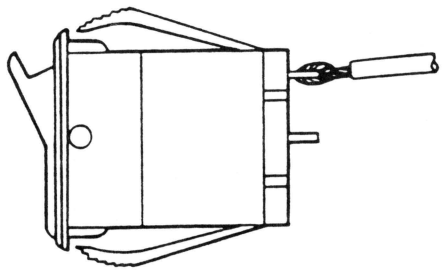

FIGURE 6

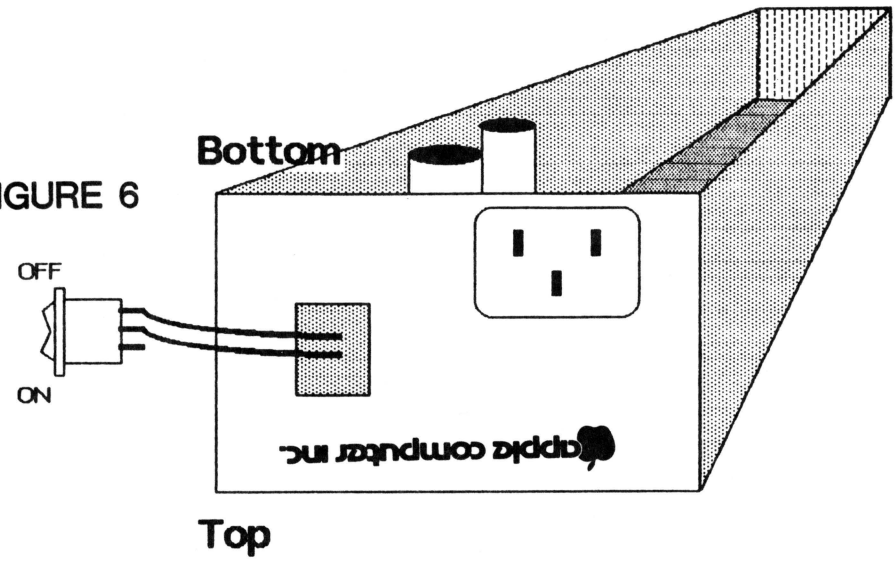

FIGURE 7

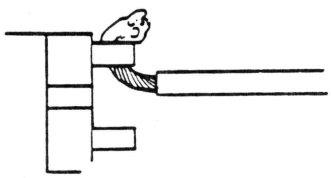

TOO LITTLE SOLDER ,
POOR MECHANICAL CONNECTION

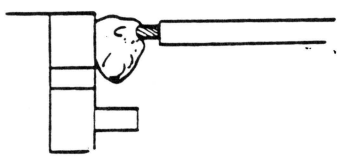

TOO MUCH SOLDER

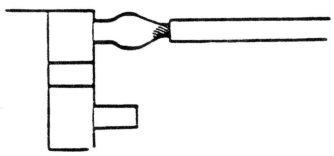

GOOD

e. **Slip a one-inch piece of heat-shrink tubing on each lead, and slide it back as far as possible (to prevent heat damage while you are soldering).**

f. Shape the end of each lead so that it will fit through the terminal of the new switch (use needlenose pliers).

5. INSTALL THE NEW SWITCH

a. **THREE-TERMINAL SWITCH:** Thread either lead through the hole in either outside terminal and crimp it with the pliers, so that the lead forms a loop around the end of the terminal (Figure 5). Attach the other lead to the middle terminal in the same way.

-- The open terminal will now mark the "ON" side. Orient it toward the top of the case. (See Figure 6. If you are working with the cover off, the case will be upside down.)

TWO-TERMINAL SWITCH: Clean the terminals of the switch with an eraser; then tin them. Then thread one lead through each terminal and crimp it with pliers, to form a loop around the end of the terminal as in Figure 5.

-- Make sure that "ON" (marked on the switch) is toward the top of the case. (If you are working with the cover off, the case will be upside down: see Figure 6.)

b. Solder the leads to the terminals. To avoid damaging the switch, do not apply the soldering iron to the switch for more than 20 seconds.

c. Check your solder joints. (See Figure 7 for examples of good and bad solder joints.)

d. After the solder has cooled, slip the shrink tubing down both leads, making sure that it covers both terminals completely and overlaps the insulation on the leads. Heat the tubing with the heat gun until it has shrunk to a tight covering around each terminal and lead.

e. Make sure the "ON" side of the switch (the open terminal of the three-terminal switch) is toward the top of the case, and push the switch into its slot in the case until it seats itself firmly. (See Figure 8.)

6. REPLACE THE COVER

a. If you removed the cover, turn over the power supply and shake it to remove loose objects, metal shavings, etc. Inspect visually for excess solder droplets, etc., and remove any you find. (A brush, vacuum or air gun might be helpful.)

b. Replace the cover and fasten it with the eight screws. DO NOT REPLACE THE RIVETS.

7. TEST THE REPAIR

a. Plug the repaired power supply into the motherboard of a known-good Apple][(NOT the customer's).

b. Make sure the power supply switch is set to "OFF". Connect the power cord to the power supply, then to the wall.

c. Turn on the power supply. If the power light goes on and the Apple tries to boot, the repair was successful. Replace the power supply in the customer's Apple and return the system to the customer.

If the repair was not successful, swap power supplies for the customer and send the customer's power supply to Regional Service Center.

FIGURE 8

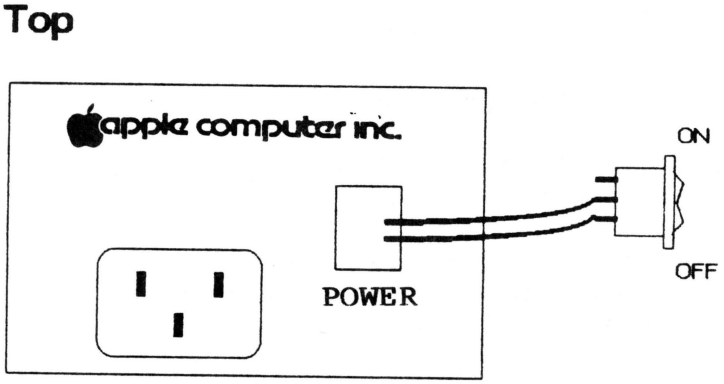

apple computer inc.

CHECKLIST

Use this checklist as an on-the-job reminder. For detailed explanations of any steps, refer to the procedures on the preceding pages.

1. Equipment ready?

    a. Switch
    b. Medium flatblade screwdriver
    c. Needlenose pliers
    d. X-acto knife
    e. Four-inch diagonal cutters ("dikes")
    f. Heat gun
    g. Shrink tubing
    h. Wire stripper (preferably automatic)
    i. Soldering iron (25 watt) and 63/37 rosin-core solder
    j. Hemostats
    k. Small or medium Phillips screwdriver
    l. Drill with 13/64 inch (5mm) bit
    m. Safety goggles
    n. Center punch or 16-penny nail
    o. Hammer
    p. Eraser
    q. Fuse-pulling tool (insulated)
    r. Fuse

2. Remove power supply.

3. Open case and check fuse. (Optional)

4. Pry out switch.

5. De-solder and prepare leads.

6. **Put shrink tubing on leads.**

7. Solder leads to new switch. (See Figure 8 for orientation of 3-pole switch.)

8. **Position shrink tubing over solder joints and apply heat.**

9. Pop switch in.

10. Shake out case (if open).

11. Replace cover; **do not replace rivets.**

12. **Test on Apple][(NOT THE CUSTOMER'S).**

DATE: AUGUST 24, 1983
TO: All Authorized Regional Service Centers.
FROM: Service Enginnering BY: Al Estrela
SUBJECT: New Apple IIe power supply
ACTION: All Defective supplies to be sent to Macro Center.

1. Apple IIe Power supply (P/N 606-5001)

a) This is a new Power supply been installed in Apple IIe Systems.

b) CAUTION... This power supply has a light gold color and could easely be mistaken for the old Astec power supply.

c) This power supply is identified by the part number 606-5001 printed on the case, located above AC receptacle at the left side of power switch.
See attached drawing....

d) Power supply part # 606-5001
Exchange module # 664-91151
Return/Repair # 662-91151
Java ordering # 661-91151

apple computer inc.

APPLE IIe Power supply identification.

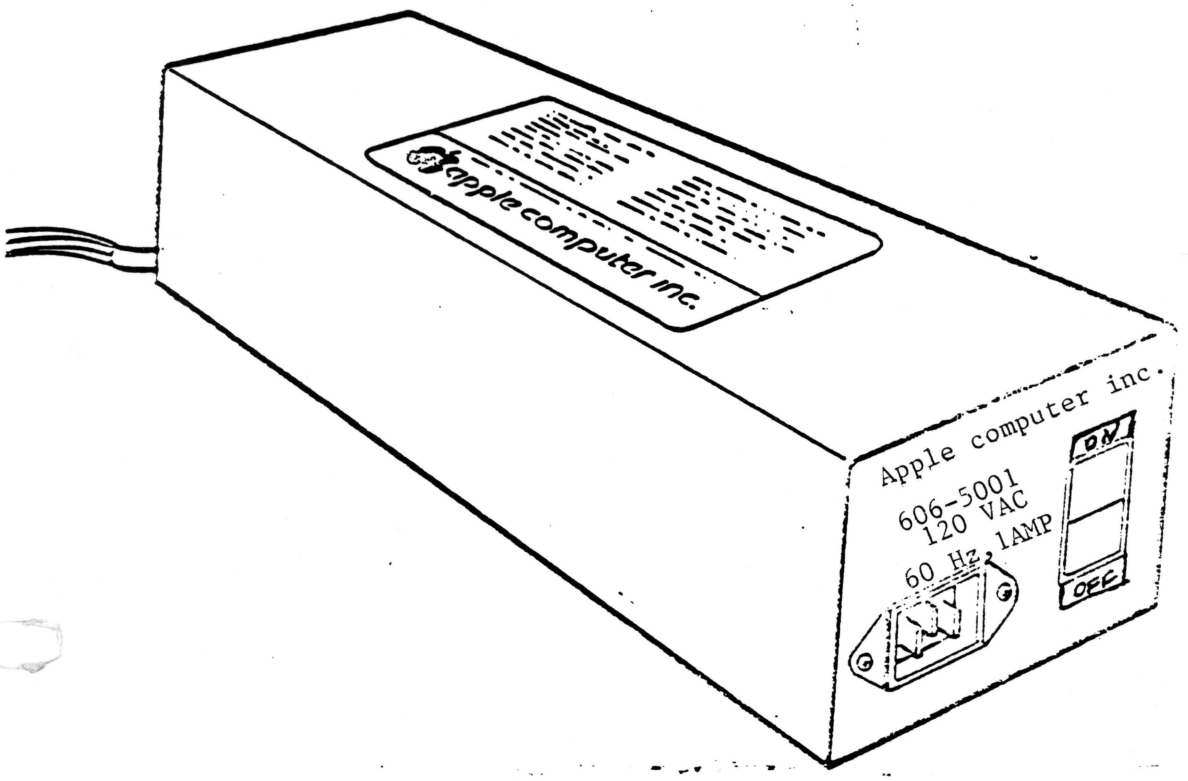

Numeric Keypad

apple computer inc.

NUMERIC KEYPAD TECHNICAL PROCEDURES

TABLE OF CONTENTS

Section 1. A. Troubleshooting
B. Assembly/Disassembly

apple computer inc.

Numeric Keypad Technical Procedures

Section 1

Troubleshooting
Assembly/Disassembly

Contents:

A. Troubleshooting 1.3
B. Assembly/Disassembly.....1.5

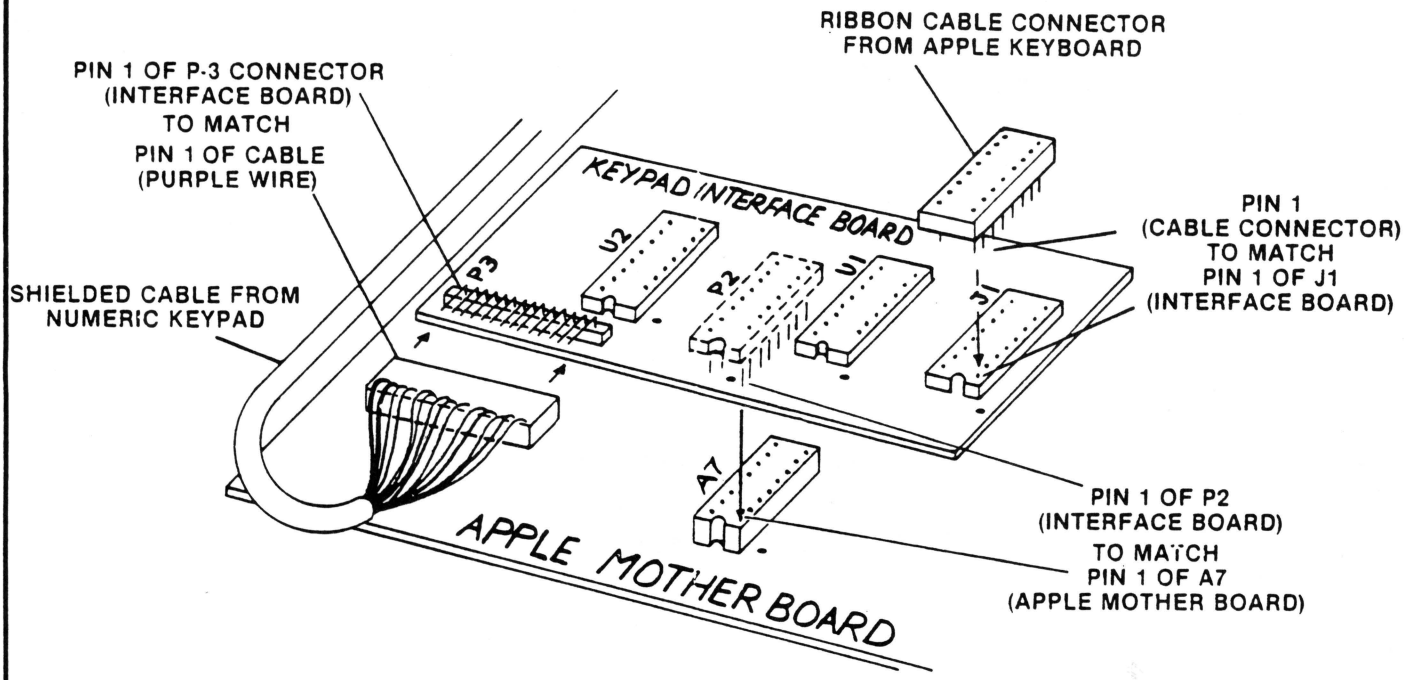
RIBBON CABLE CONNECTOR
FROM APPLE KEYBOARD
PIN 1 OF P-3 CONNECTOR
(INTERFACE BOARD)
TO MATCH
PIN 1 OF CABLE
(PURPLE WIRE)
KEYPAD INTERFACE BOARD
PIN 1
(CABLE CONNECTOR)
TO MATCH
PIN 1 OF J1
(INTERFACE BOARD)
SHIELDED CABLE FROM
NUMERIC KEYPAD
PIN 1 OF P2
(INTERFACE BOARD)
TO MATCH
PIN 1 OF A7
(APPLE MOTHER BOARD)
APPLE MOTHER BOARD

FIGURE A

apple computer inc.

A. TROUBLESHOOTING GUIDE FOR THE NUMERIC KEYPAD

1. Confirm that the keypad is malfunctioning by running keyboard test of Dealer Diagnostic diskette.

When you have isolated the malfunction to the numeric keypad, determine the failed component by performing the following steps:

2. Complete steps 1a. through 1i. of ASSEMBLY/DISASSEMBLY INSTRUCTIONS (on following pages) to gain access to and remove the keypad interface board.

3. Swap the interface board with a known good unit (from spares kit), reconnecting pins and cables as shown in Figure A.

4. Test the keypad using the Dealer Diagnostic diskette keyboard test. If the pad now works, reassemble the Apple II. If the pad doesn't work, put the old interface board back in and go to the next step.

5. Swap the cable, following steps 1j and 2 to 12 of the Assembly/Disassembly instructions. (see reminder below)

6. Test the keypad using the Dealer Diagnostic diskette keyboard test. If the pad now works, reassemble the Apple II. If the pad doesn't work, remove the new cable and use the old cable in the next step.

7. Swap the keypad assembly following steps 7 to 12 of the Assembly/Disassembly instructions. (see reminder below)

8. Test the keypad using the Dealer Diagnostic diskette keyboard test. If the pad now works, reassemble it and the Apple II (steps 13 to 15 of the Assembly/Disassembly intructions). The pad SHOULD work. If it doesn't, you have defective exchange modules. Find new exchange modules and start from step 3 above.

REMINDER: Before swapping ANY unit, POWER DOWN THE SYSTEM AND REMOVE POWER CORD FROM THE APPLE.

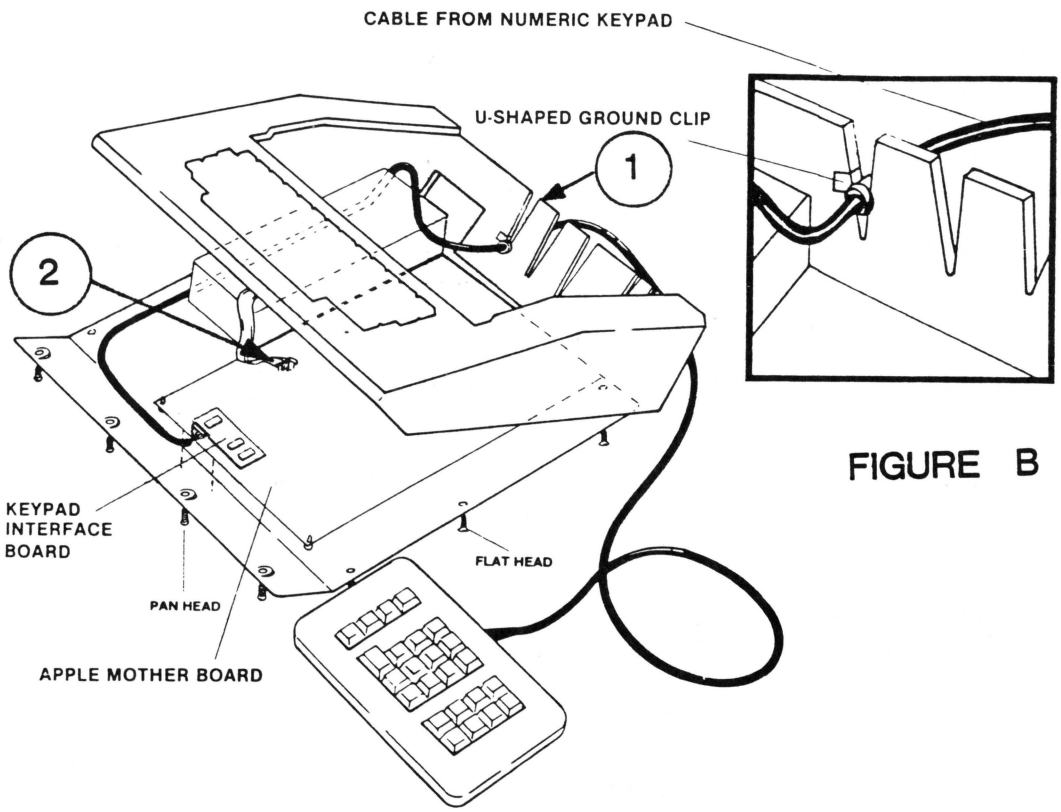

FIGURE B

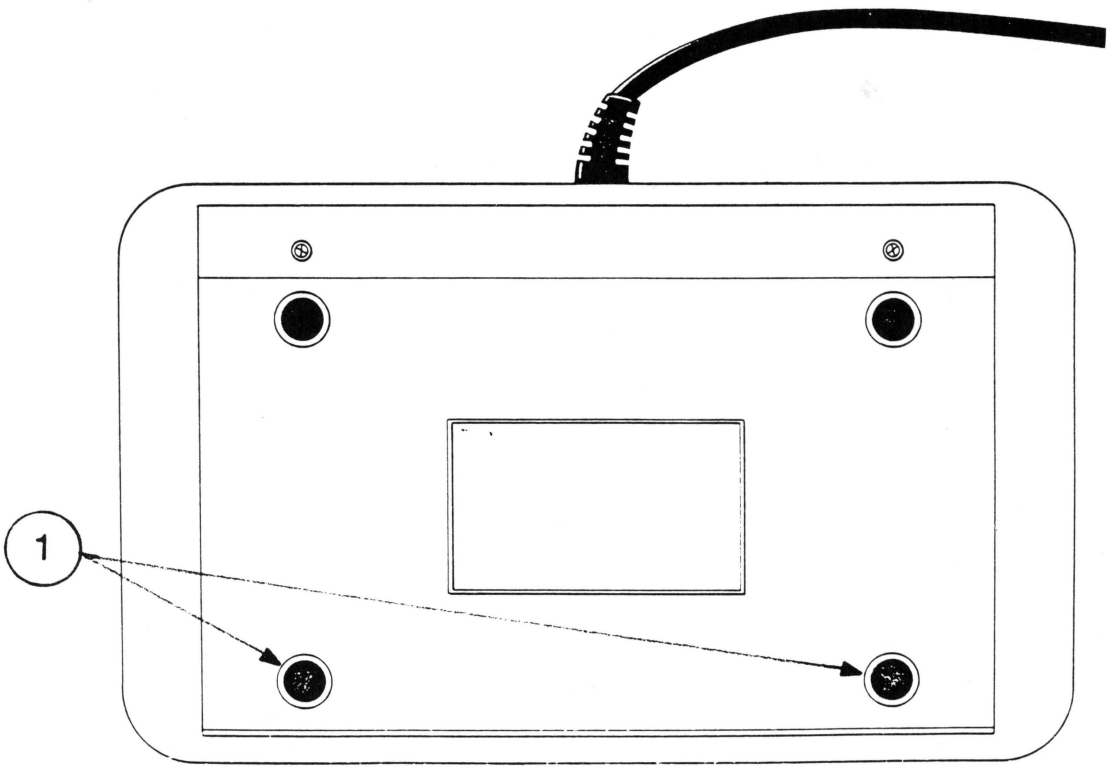

FIGURE C

apple computer inc.

B. ASSEMBLY/DISASSEMBLY INSTRUCTIONS FOR THE NUMERIC KEYPAD

Items needed:

Dealer Diagnostic diskette
Medium Phillips screwdriver
Soldering iron, solder, solder wick
Replacement modules (interface card, cable, keypad assembly)
Foam pad

DISCONNECTING KEYPAD FROM APPLE

1. Complete these steps to disconnect the numeric keypad from the Apple.

   a. Power off the system and remove power cord -- first from the wall source and then from the rear of the Apple Housing.
   b. Remove Apple lid. Except for keypad cable, disconnect all other external cables connected to the Apple.
   c. Turn Apple upside down so keyboard rests on protective foam pad.
   d. Remove six flat-head screws from three outside edges of flat portion of Apple base.
   e. Remove four pan-head screws and lock washers from front of base.
   f. Holding both base and housing, turn Apple right side up. (On newer Apple II's, it may be necessary to additionally remove four round head-screws and lock washers along the rear of the Apple that fasten the mother board to the base.)
   g. Gently lift the front of the housing slightly off the base and unplug keyboard connector (see Figure B, #2) from keypad interface board.
   h. Grasp keypad interface board firmly and gently lift from motherboard.
   i. Lift housing off base and set aside (careful - keypad cable still attached)

   Do NOT proceed to next step unless you are swapping the cable or keypad assembly. Return to #3 of Troubleshooting Guide.

   j. Unthread cable through notch in rear of Apple. (see Figure B, #1)

SWAPPING THE CABLE & KEYPAD ASSEMBLY

2. Remove the 2 exposed Phillips screws on bottom of keypad case.

3. Remove the 2 LOWER rubber feet. They just pry off. (See Figure C, #1)

Continue on page following illustrations.

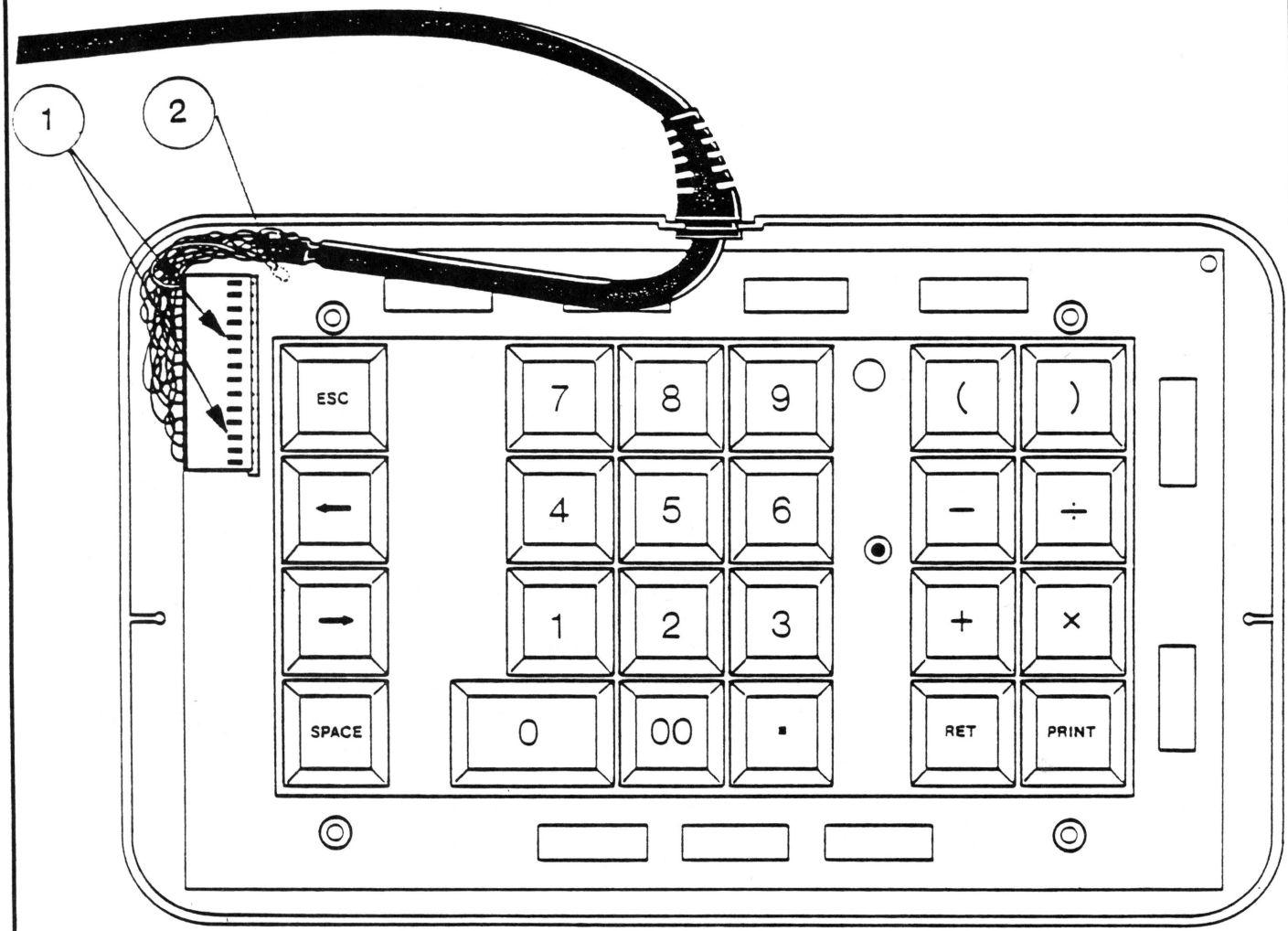

FIGURE D

4. Remove the 2 screws that are under the rubber feet you just removed.

5. Holding the case top to the bottom, turn the pad back over.

6. Remove case top by lifting off.

7. If you are replacing the CABLE ONLY, skip this step. Get the exchange keypad assembly from spares kit and set it next to the customer's keypad assembly. Pry off the key caps ONE AT A TIME, placing the cap from the customer's pad on to the new pad at the same location.

8. Note how the cable is laid and how it exits the case as shown in Figure D. Lift out customer's pad and place on normal soldering surface. (This step might not be applicable in swapping the keypad assembly.)

9. Carefully unplug the cable connector noting that the grooves of the cable connector are face up (see Figure D, #1).

10. Use a soldering iron to unsolder the grounding wire that is attached to the upper left side of the pad (see Figure D, #2)..

11. Get the appropriate cable (new one if you are replacing the cable, old one if this is a keypad swap) and plug it into the appropriate keypad assembly (old pad if this is a "cable only" swap, new pad if you are replacing the customer's pad). Note that the grooves of the cable connector are face up (see Figure D, #1).

12. Solder the ground wire to the designated area at the upper left side of the pad (see Figure D, #2).

STOP HERE! If you are CABLE SWAPPING, return to step 6 of the Troubleshooting Guide. If you are SWAPPING THE KEYPAD ASSEMBLY, return to step 8 of the Troubleshooting Guide. Do NOT reassemble keypad at this point.

13. When reassembling keypad, be sure the cable is laid correctly in the case bottom and that it points down as it exits the case as shown in Figure D. Be careful that all wires are set INSIDE the bottom of the case so none get pinched when the top is secured in place.

14. Replace case top. Turn pad over and replace 4 screws and LOWER rubber feet.

Continue on page following illustrations.

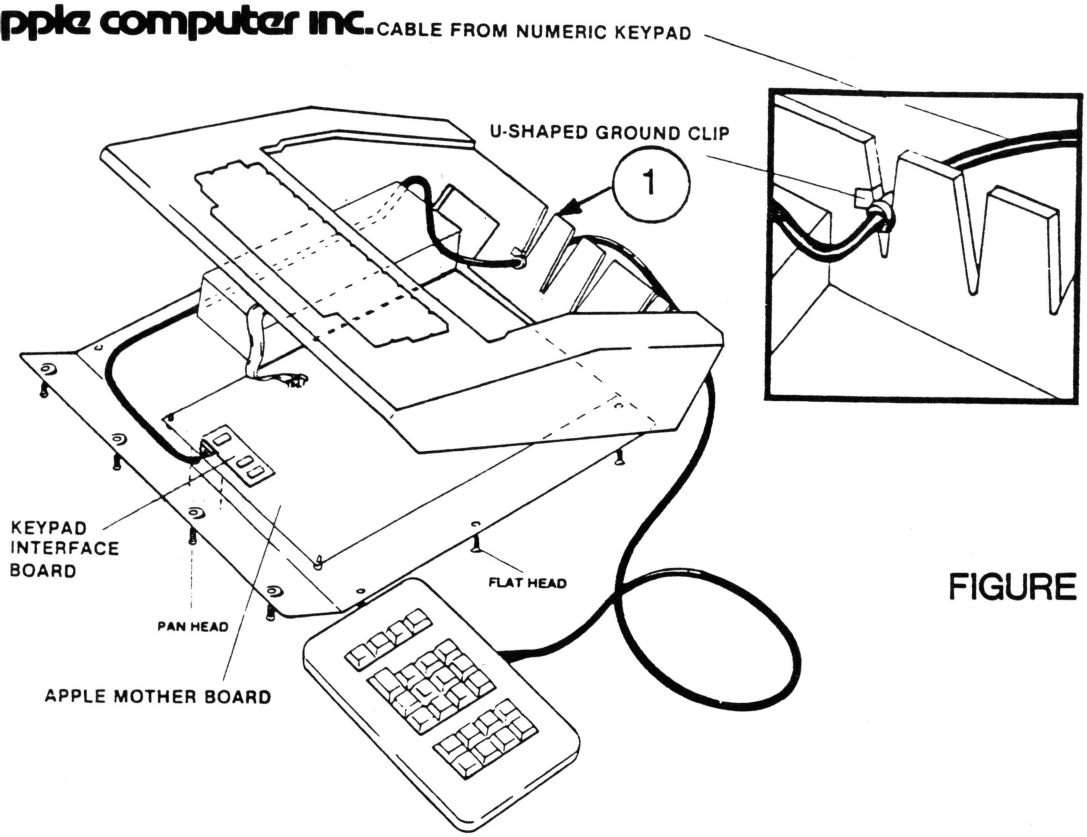

FIGURE E

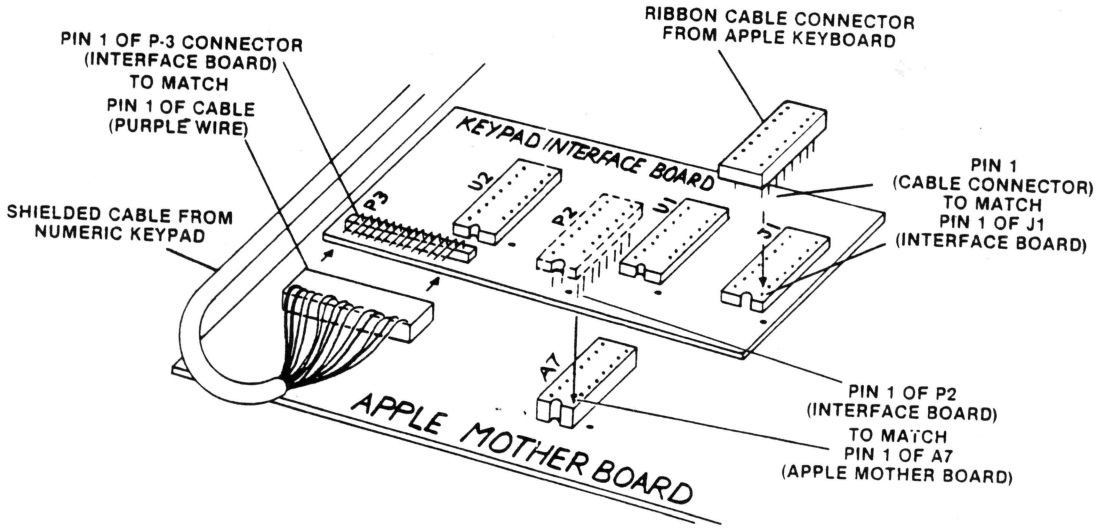

FIGURE F

RECONNECTING KEYPAD TO APPLE

15. Complete these steps to reconnect numeric keypad to Apple.

    a. Set housing back on Apple base (do NOT set screws in place yet!)
    b. Thread the cable through a notch in the rear of your Apple.
    c. Slide the little u-shaped ground clip on the cable down the edge of the notch to secure the ground to the Apple case. (see Figure E, #1)
    d. Plug interface board connector P2 into mother board socket at A7. Be sure to match up P2 pin 1 to A7 pin 1. Plug keyboard connector into keypad interface board connector J1. Be sure to match up pin 1 - J1 to pin 1 keyboard connector. (see Figure F)
    e. Holding both base and housing, turn Apple upside down so keyboard rests on foam pad.
    f. Install four lock washers and pan-head screws at front of base.
    g. Install six flat-head screws at three outside edges of Apple base.
    h. Turn Apple right side up, reinstall lid, and reconnect other cable connected items and the power cord to Apple.

APPLE LEVEL I TECHNICAL PROCEDURES MANUAL
DOCUMENT CONTROL SHEET #1

This is the July 1, 1983 version of the Level I Technical Procedures manual (Part Number 072-0062). The manual has not been updated.

THIS IS UPDATE NUMBER 1

apple computer inc.

APPLE COLOR PLOTTER TECHNICAL PROCEDURES

TABLE OF CONTENTS

Section 1. Troubleshooting

Introduction.....1.3
Troubleshooting Flowchart.....1.4
Interface Test Flowchart.....1.6
Alignment Procedure.....1.7
Plotter Test Example.....1.8

Section 2. Setup and Configuration

Introduction.....2.2
Hooking up the Plotter.....2.2
Setting the DIP Switches.....2.3
Load Pens.....2.5
Load Paper.....2.5
Testing Computer/Plotter Communication.....2.6

Section 3. Take-apart

Introduction.....3.3
Tools Needed for Procedures.....3.3

Cover
- Remove 3.5
- Replace 3.5

Carriage/Bed Assembly
- Remove.....3.7
- Replace.....3.7

Main PC Board
- Remove.....3.7
- Replace.....3.9

Keyboard Assembly
- Remove.....3.9
- Replace.....3.11

On-off Switch
- Remove.....3.11
- Replace 3.11

Transformer
Remove.....3.13
Replace.....3.13

Paper Feed Roller Motor
Remove.....3.15
Replace.....3.15

Left Pulley Assembly
Remove and Replace.....3.17

Pulley Motor
Remove.....3.19
Replace.....3.23

Carriage Wire
Replace.....3.23
Adjust.....3.29

Solenoid
Remove and Replace.....3.31
Adjust.....3.31

Home Position Switch
Remove and Replace 3.33

Pen Carriage Assembly
Remove.....3.33
Replace.....3.33

Fuse
Remove and Replace.....3.35

Bail Spring
Remove.....3.37
Replace.....3.37

Section 4. Exploded Diagram and Parts List

apple computer inc.

Apple Color Plotter Technical Procedures

Section 1

Troubleshooting

Contents:

Introduction.....1.3
Troubleshooting Flowchart.....1.4
Interface Test Flowchart.....1.6
Alignment Procedure.....1.7
Plotter Test Example (from plotter test diskette).....1.8
Plotter Self-test.....1.9

For these procedures you will need:

- Plotter test diskette
- Medium phillips screwdriver
- Medium flatblade screwdriver
- Allen wrench
- 5.5 mm nutdriver
- Tape

Introduction

The troubleshooting flowchart is largely self explanatory. Refer to the take-apart section of these procedures if you need instruction on how to remove, replace, and adjust modules.

A few terms that are used in the flowchart may need clarification.

Plotter Initialization - After powering-up the plotter, the pen carriage travels to the left and rotates several times until pen number 1 is pointing down.

Self-Test - After power-up and initialization, press the test button on the plotter keyboard. The plotter is reinitialized, and then draws a self-test pattern.

Names of parts and their location can be found in the Exploded Diagram and Parts List (Section 4 of these procedures).

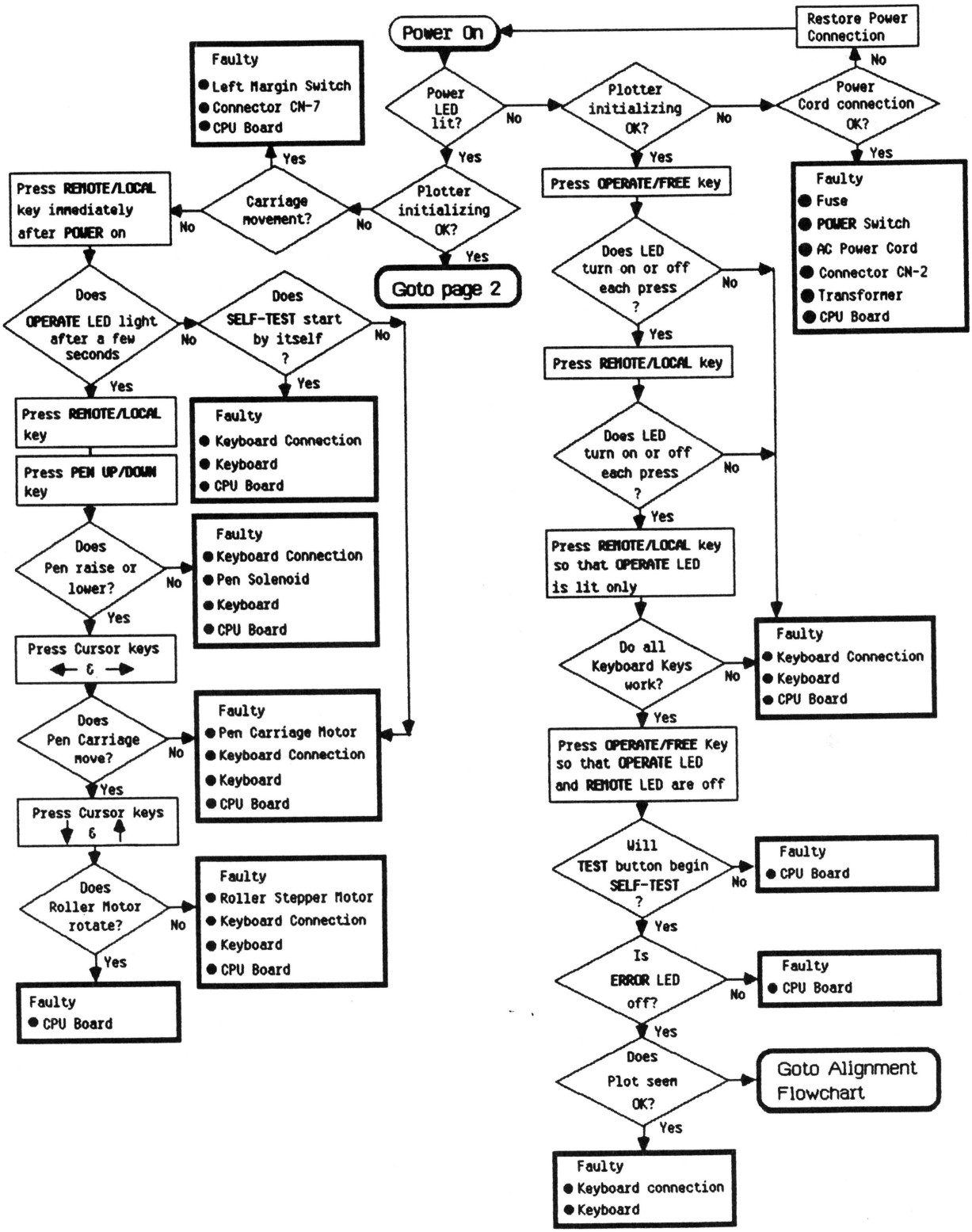
Power On
Power LED lit?
No
Yes
Plotter initializing OK?
No
Yes
Power Cord connection OK?
No
Yes
Restore Power Connection
Faulty
● Fuse
● POWER Switch
● AC Power Cord
● Connector CN-2
● Transformer
● CPU Board
Press OPERATE/FREE key
Does LED turn on or off each press ?
No
Yes
Press REMOTE/LOCAL key
Does LED turn on or off each press ?
No
Yes
Press REMOTE/LOCAL key so that OPERATE LED is lit only
Do all Keyboard Keys work?
No
Yes
Faulty
● Keyboard Connection
● Keyboard
● CPU Board
Press OPERATE/FREE Key so that OPERATE LED and REMOTE LED are off
Will TEST button begin SELF-TEST ?
No
Yes
Faulty
● CPU Board
Is ERROR LED off?
No
Yes
Faulty
● CPU Board
Does Plot seen OK?
No
Yes
Goto Alignment Flowchart
Faulty
● Keyboard connection
● Keyboard
Plotter initializing OK?
No
Yes
Faulty
● Left Margin Switch
● Connector CN-7
● CPU Board
Carriage movement?
No
Yes
Press REMOTE/LOCAL key immediately after POWER on
Goto page 2
Does OPERATE LED light after a few seconds
No
Yes
Does SELF-TEST start by itself ?
No
Yes
Faulty
● Keyboard Connection
● Keyboard
● CPU Board
Press REMOTE/LOCAL key
Press PEN UP/DOWN key
Does Pen raise or lower?
No
Yes
Faulty
● Keyboard Connection
● Pen Solenoid
● Keyboard
● CPU Board
Press Cursor keys ← &
Does Pen Carriage move?
No
Yes
Faulty
● Pen Carriage Motor
● Keyboard Connection
● Keyboard
● CPU Board
Press Cursor keys ↓ &
Does Roller Motor rotate?
No
Yes
Faulty
● Roller Stepper Motor
● Keyboard Connection
● Keyboard
● CPU Board
Faulty
● CPU Board

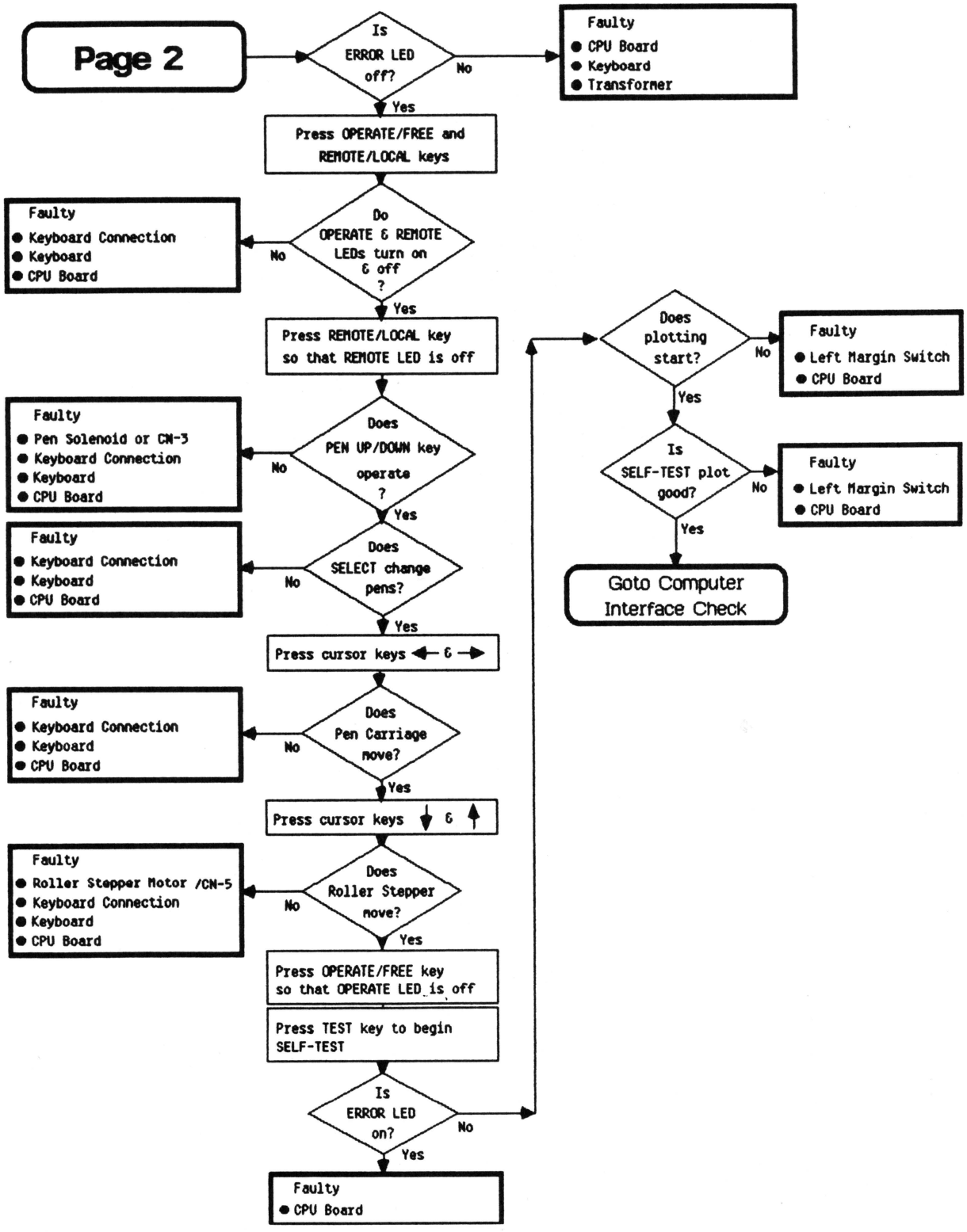
Page 2
Is ERROR LED off?
No
Faulty
● CPU Board
● Keyboard
● Transformer
Yes
Press OPERATE/FREE and REMOTE/LOCAL keys
Do OPERATE & REMOTE LEDs turn on & off ?
No
Faulty
● Keyboard Connection
● Keyboard
● CPU Board
Yes
Press REMOTE/LOCAL key so that REMOTE LED is off
Does PEN UP/DOWN key operate ?
No
Faulty
● Pen Solenoid or CN-3
● Keyboard Connection
● Keyboard
● CPU Board
Yes
Does SELECT change pens?
No
Faulty
● Keyboard Connection
● Keyboard
● CPU Board
Yes
Press cursor keys ← & →
Does Pen Carriage move?
No
Faulty
● Keyboard Connection
● Keyboard
● CPU Board
Yes
Press cursor keys ↓ & ↑
Does Roller Stepper move?
No
Faulty
● Roller Stepper Motor /CN-5
● Keyboard Connection
● Keyboard
● CPU Board
Yes
Press OPERATE/FREE key so that OPERATE LED is off
Press TEST key to begin SELF-TEST
Is ERROR LED on?
No
Yes
Faulty
● CPU Board
Does plotting start?
No
Faulty
● Left Margin Switch
● CPU Board
Yes
Is SELF-TEST plot good?
No
Faulty
● Left Margin Switch
● CPU Board
Yes
Goto Computer Interface Check

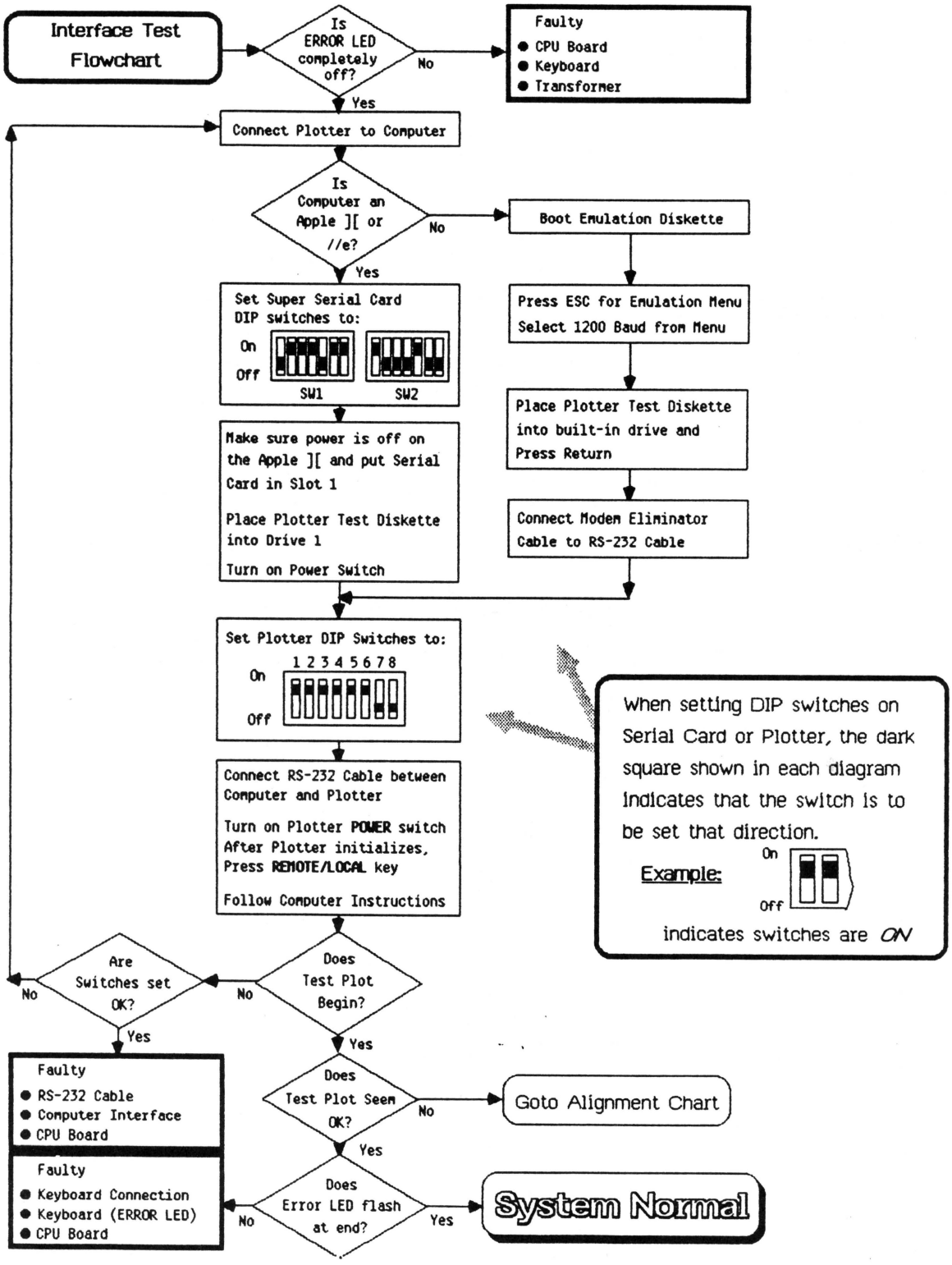
Interface Test Flowchart
Is ERROR LED completely off?
No
Faulty
CPU Board
Keyboard
Transformer
Yes
Connect Plotter to Computer
Is Computer an Apple][or //e?
No
Boot Emulation Diskette
Yes
Set Super Serial Card DIP switches to:
On
Off
SW1
SW2
Press ESC for Emulation Menu
Select 1200 Baud from Menu
Make sure power is off on the Apple][and put Serial Card in Slot 1
Place Plotter Test Diskette into Drive 1
Turn on Power Switch
Place Plotter Test Diskette into built-in drive and Press Return
Connect Modem Eliminator Cable to RS-232 Cable
Set Plotter DIP Switches to:
1 2 3 4 5 6 7 8
On
Off
When setting DIP switches on Serial Card or Plotter, the dark square shown in each diagram indicates that the switch is to be set that direction.
Example:
On
Off
indicates switches are ON
Connect RS-232 Cable between Computer and Plotter
Turn on Plotter POWER switch
After Plotter initializes, Press REMOTE/LOCAL key
Follow Computer Instructions
Are Switches set OK?
No
Does Test Plot Begin?
No
Yes
Yes
Faulty
RS-232 Cable
Computer Interface
CPU Board
Does Test Plot Seem OK?
No
Goto Alignment Chart
Yes
Faulty
Keyboard Connection
Keyboard (ERROR LED)
CPU Board
Does Error LED flash at end?
No
Yes
System Normal

Alignment Procedure

View test sheet made in Interface Test

Refer to page two for number references

Does test plot look like next page ?

No

Does paper feed correctly ?

No

Check
- Feed Roller Arm
- Feed Rollers/ Paper Roller
- Paper Feed (Roller) Motor
- CPU Board

Yes

Is Pen Carriage working ok?

No

Check
- Carriage Wire Tension
- Pen Cable Pulleys
- Pen Carriage Slider
- Pulley Motor

Yes

Is ERROR LED off?

No

Check
- Plotter Interface Software
- Interface Cable
- Computer Interface
- Pulley Motor
- CPU Board

Yes

Reboot software and try Interface Test again.

If plot still is wrong, check inside Plotter for foreign material or other damage to Plotter

Yes

Visually inspect pattern [1] and circular pattern [2] for vibration of the pen. Make sure amplitude of vibration is 0.3 mm or less.

Is amplitude less than 0.3 mm ?

No

Check
- Loose Pens or Pen Holder
- Tension of Carriage Wire
- Faulty Pen(s)
- Pen height Solenoid Adjustment
- Faulty Pen Carriage

Yes

Visually inspect pattern [3] and outline pattern [4] for broken lines, sharp changes in line thickness or density

Are lines acceptable ?

No

Check beginning & end points in [4] for error in X & Y positioning.

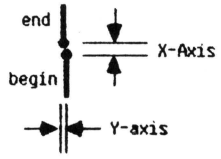

For X-axis, check Feed Rollers and Paper Roller.

For Y-axis, check Guide wire Pulleys, Pen Carriage for ease of movement.

Check
- Loose Pens or Pen Carriage
- Faulty Pen(s)
- Pen height Solenoid Adjustment
- Idler Rollers/ Paper Roller
- Faulty Pen Carriage

Yes

Visually inspect pattern [5] showing pen color change.

Positional error should be less than 1 line width (.4mm)

Are colored lines acceptable ?

No

Check
- Loose Pens or Pen Carriage
- Tension of Carriage Wire
- Faulty Pen(s)
- Pen height solenoid adjustment
- Faulty Pen Carriage

Yes

Visually inspect pattern [6] showing plotted text.

Check quality of text to see if the line making up each letter is uniform

Is text lettering ok?

No

Yes

System Normal

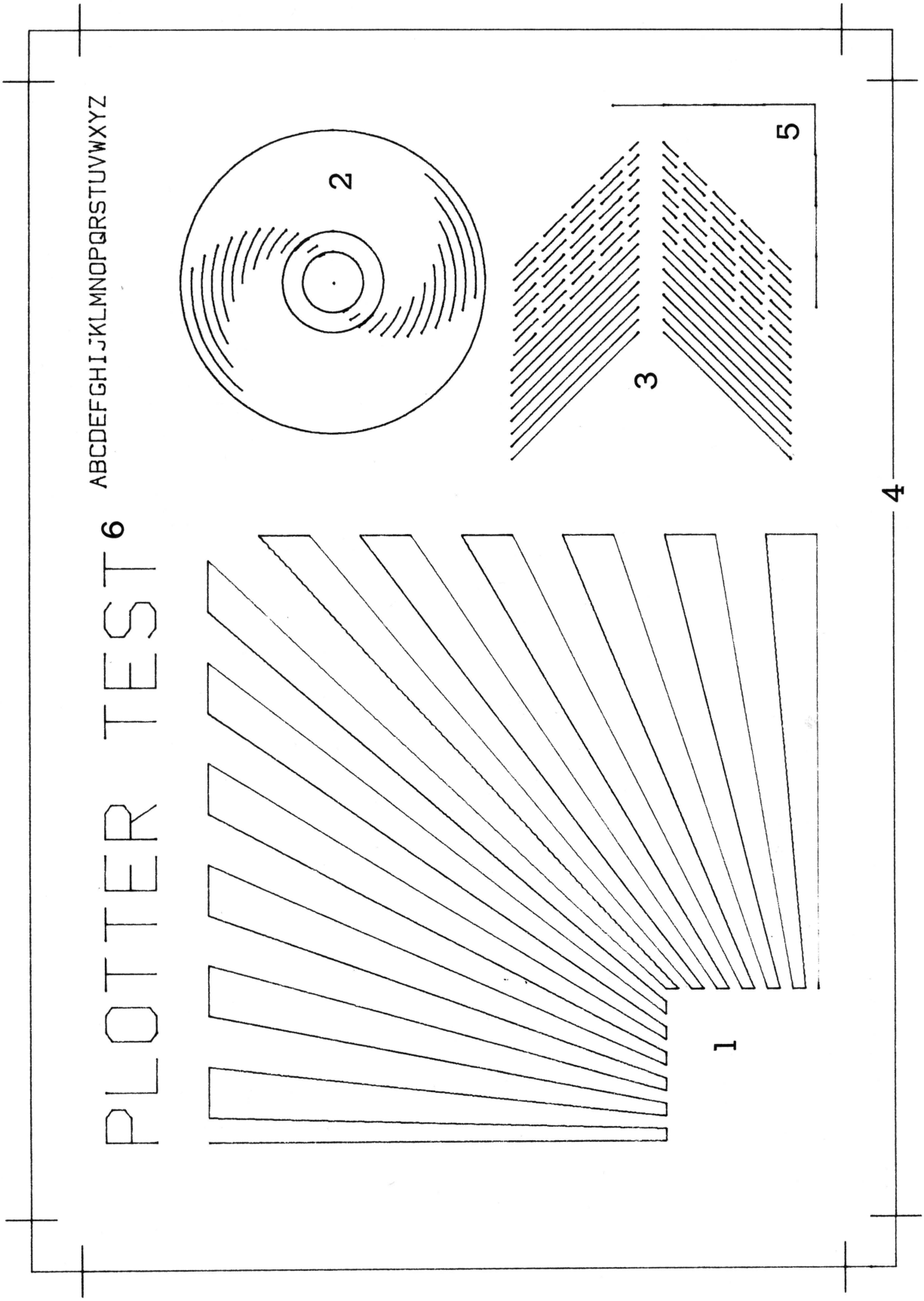
PLOTTER TEST
ABCDEFGHIJKLMNOPQRSTUVWXYZ
1
2
3
4
5
6

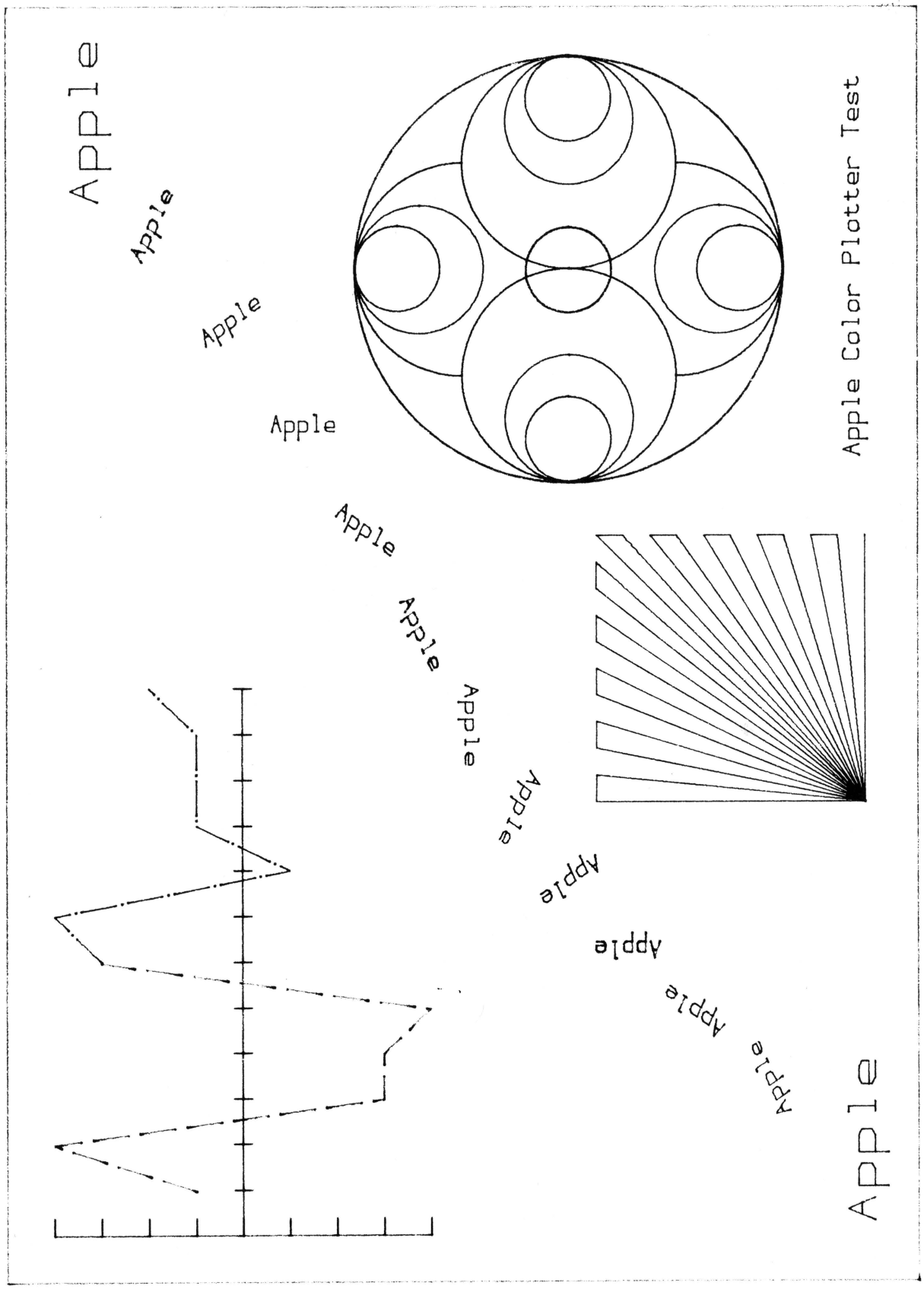
Apple
Apple
Apple
Apple
Apple
Apple
Apple
Apple
Apple
Apple
Apple
Apple
Apple
Apple Color Plotter Test

apple computer inc.

Apple Color Plotter

Section 2

Setup and Configuration

Contents:

Introduction.....2.2
Hooking up the Plotter.....2.2
Setting the DIP Switches.....2.3
Load Pens.....2.5
Load Paper.....2.5
Testing Computer/Plotter Communication.....2.6

For these procedures you will need:

- Apple Color Plotter
- Apple computer with monitor and power cable
    - If you are attaching an Apple //e,][+, or][you will need a serial port card
    - If you are attaching an Apple /// you will need an Apple][Emulation diskette
- Apple Color Plotter test diskette
- Plotter power cable
- RS232 cable
- Modem eliminator cable
- Small flatblade screwdriver

Introduction

Refer to Section 4, Exploded Diagram and Parts List, if you need assistance locating the parts referred to below.

There are a few things you must remember to do when you are setting up the plotter for a customer.

1. Use the modem eliminator cable as well as the RS232 cable to connect the plotter to an Apple.

2. Verify the setting of the plotter DIP switches. (Although the User's Guide says the plotter will be shipped with the switches set correctly, it is possible that they will not be correct.)

3. Boot the plotter test diskette to see that the computer communicates successfully with the plotter.

Below you will find brief instructions outlining these procedures.

Beware: The Apple /// and the Apple][computers have slightly different procedures. Be sure to read the notes (in each section below) which describe these differences.

Hooking up the Plotter

1. Connect the "female" end of the modem eliminator cable (the shorter of the two cables you received with the color plotter) to one of the ends of the RS232 cable.

2. Tighten the screws that come with the cables to secure the connection.

3. Connect one end (it does not matter which) of the cable you just "made" to the plotter. Secure the connection by tightening the mounting screws.

4. Connect the other end of the cable to the computer.

   Note: Apple /// - Attach it to port C.

   Note: Apple][,][+, //e - Attach it to a super-serial card with DIP switches set as seen below (See Figure 1).

FIGURE 1

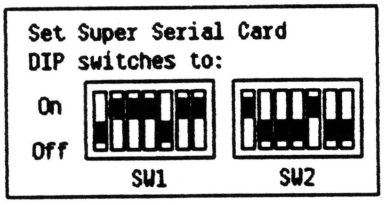

When setting DIP switches on Serial Card or Plotter, the dark square shown in each diagram indicates that the switch is to be set that direction.

Example: 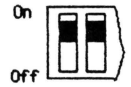

indicates switches are *ON*

4. Connect the power cable to the plotter.

5. Plug the power cable into an AC outlet.

Setting the DIP switches

The plotter is capable of communicating with a large number of computers. Within the RS232 standard there are variations of signal format and transmission speed, to suit different machine-to-machine communication requirements. The interface setting switches allow you to define the RS232 input.

The interface setting switches are on the back panel of the plotter.

Apple Computers communicate with the plotter via an RS232 interface that is configured as follows:

- 7 bits
- No parity selected
- 2 stop bits
- 1200 baud

Generally the settings for the plotter, when communicating with an Apple, should be as shown in Figure 2, below.

FIGURE 2

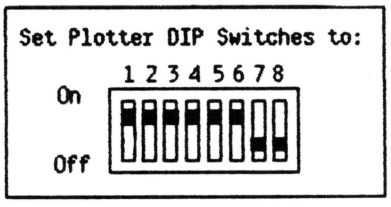

When setting DIP switches on Serial Card or Plotter, the dark square shown in each diagram indicates that the switch is to be set that direction.

Example: 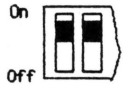

indicates switches are *ON*

For computers which do not follow this particular RS232 interface requirement, look at the table below. (See Figure 3.)

FIGURE 3

Plotter Interface DIP Switch Settings

1	2	3	4	5	6	7	8	
					OFF	OFF	OFF	75 BAUD
					OFF	OFF	ON	150 BAUD
					OFF	ON	OFF	300 BAUD
					OFF	ON	ON	600 BAUD
					ON	OFF	OFF	1200 BAUD
					ON	OFF	ON	2400 BAUD
					ON	ON	OFF	4800 BAUD
					ON	ON	ON	9600 BAUD
			OFF	OFF				2 STOP BITS
			ON	OFF				1.5 STOP BITS
			OFF	ON				1 STOP BIT
			ON	ON				INVALID
		OFF						EVEN PARITY
		ON						ODD PARITY
	OFF							PARITY
	ON							NO PARITY
OFF								8 BITS
ON								7 BITS

Load Pens

Please note: If these instructions are not sufficient, a more detailed explanation can be found in the "Pens and Paper" chapter in the User's Guide.

1. Remove the pen holder from the pen carriage by pulling it towards you by the light colored plastic.

2. The pen holder has the numbers 1 through 4 on the front. Load the holder with the following pen/number combinations: black/1; red/2; green/3; blue/4.

3. Install the holder in the pen carriage. (Slide the pen holder onto the hub of the (black) carriage head until it snaps into place.)

   NOTE: The holder will only fit one way.

Load Paper

Please note: If these instructions are not sufficient, more detailed explanations can be found in the "Pens and Paper" chapter in the User's Guide.

Set paper width

1. Push pen carriage to the left.

2. Pull the light colored arm of the right feed roller horizontally toward you and slide the feed roller mechanism sideways to the right as far as it will go.

3. Slide a piece of 8 1/2 by 11 inch paper lengthwise on the front deck of the plotter in the position to be fed in, with its left edge about 6 mm (1/4") from the left wall of the plotter.

4. Pull the light colored arm of the right feed roller horizontally toward you and slide the feed roller mechanism sideways to the left until it is well over the right edge of the paper. The paper should not run into the arm itself.

5. Release the arm, then move the arm and feed roller to the right a short distance until it clicks into a notch.

   Note: The feed roller will not drop down enough to grip the paper until it clicks into a notch.

Insert paper

6. Slide a sheet of paper under the metal tabs until it will go no further. Make the paper align with the line at the left of the paper table, marked "paper side."

7. Depress the paper feed knob on the right of the plotter, and turn it clockwise. You may have to push the paper a bit before it catches.

   Paper is properly inserted when the top edge reaches the marks half way up the paper table.

   If the paper is not properly aligned (straight), remove it and try again.

Testing Computer/Plotter Communication

For the Apple ///

1. Turn on the plotter.
2. Press LOCAL on the plotter keyboard.
3. Boot the Apple][Emulation diskette.
4. Insert plotter test diskette.
5. Press RETURN. (Continue at Testing the Plotter)

For the Apple][,][+, and //e

1. Boot the plotter test diskette in disk drive 1.

Testing the plotter

Just follow the instructions on the screen.

That is:

- Load the paper into the plotter. (The "size A" on the screen refers to an "A" on the plotter table, which indicates the width of the paper.)

- Press RETURN.

The plotter should now draw a test pattern. See Figure 4, on the following page, for an example.

FIGURE 4

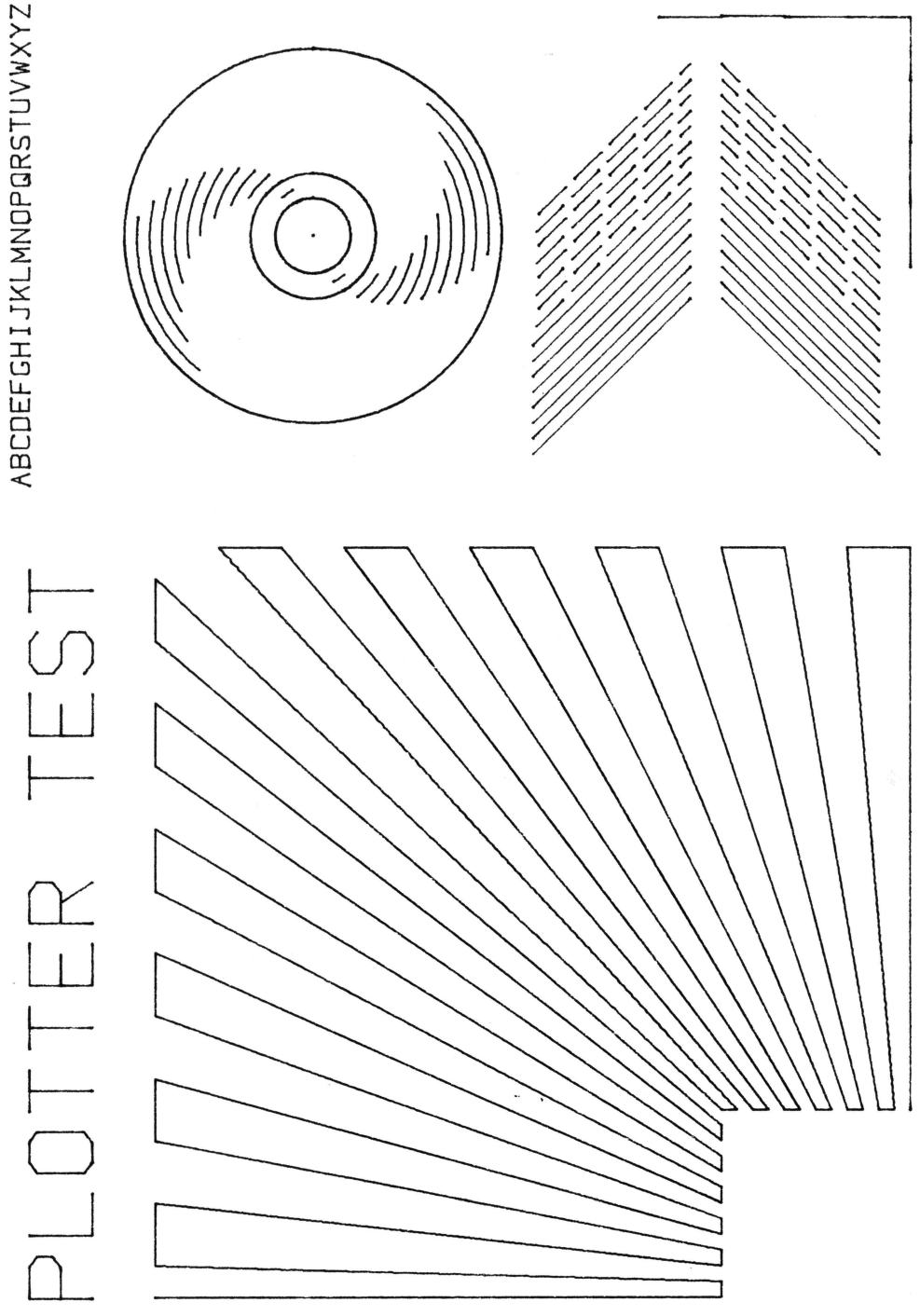

apple computer inc.

Apple Color Plotter Technical Procedures

Section 3

Take-apart

Contents:

Introduction.....3.3
Tools Needed for Procedures.....3.3

Cover
- Remove 3.5
- Replace 3.5

Carriage/Bed Assembly
- Remove.....3.7
- Replace.....3.7

Main PC Board
- Remove.....3.7
- Replace.....3.9

Keyboard Assembly
- Remove.....3.9
- Replace.....3.11

On-off Switch
- Remove.....3.11
- Replace 3.11

Transformer
- Remove.....3.13
- Replace.....3.15

Paper Feed Roller Motor
- Remove.....3.15
- Replace.....3.17

Left Pulley Assembly
- Remove and Replace.....3.17

Pulley Motor
- Remove.....3.19
- Replace.....3.23

Carriage Wire
- Replace.....3.23
- Adjust.....3.29

Solenoid
Remove and Replace.....3.31
Adjust.....3.31

Home Position Switch
Remove and Replace 3.33

Pen Carriage
Remove.....3.33
Replace.....3.35

Fuse
Remove and Replace.....3.35

Bail Spring
Remove.....3.37
Replace.....3.37

apple computer inc.

APPLE COLOR PLOTTER TAKE-APART

Introduction

These procedures are constructed so you can find the replacement or adjustment you are interested in by using the table of contents as a reference guide.

Since there is no formal training on this product, go through this entire procedure if you have not done so previously. It is probably not necessary for you to practice the soldering in the removal and replacement of the ON-OFF switch.

Be sure to:

- follow the removal procedures in the order in which they are presented. Then reassemble the plotter, in the reverse order.

- perform the adjustments when they are referred to in the replacement sections (i.e., do the solenoid adjustment as part of replacing the solenoid, and do the carriage wire adjustment when replacing the pulley motor).

- perform the carriage wire replacement. The first time it can be very tricky!

- remove and replace both motors.

Remember the following points in reading these procedures:

- Unless otherwise noted, any direction designations assume the plotter is facing you in the usual operating position.

- The adjustments are approximate. It is not necessary to measure the gaps using feeler gauges or calipers.

- **In all cases, when replacing parts or making any of the adjustments, first turn off and unplug the plotter.**

Tools Needed for All Procedures

- Medium phillips screwdriver
- Medium flat blade screwdriver
- 1.5 mm allen wrench
- 5.5 mm nutdriver
- Needlenose pliers
- Tape

apple computer inc.

FIGURE 1

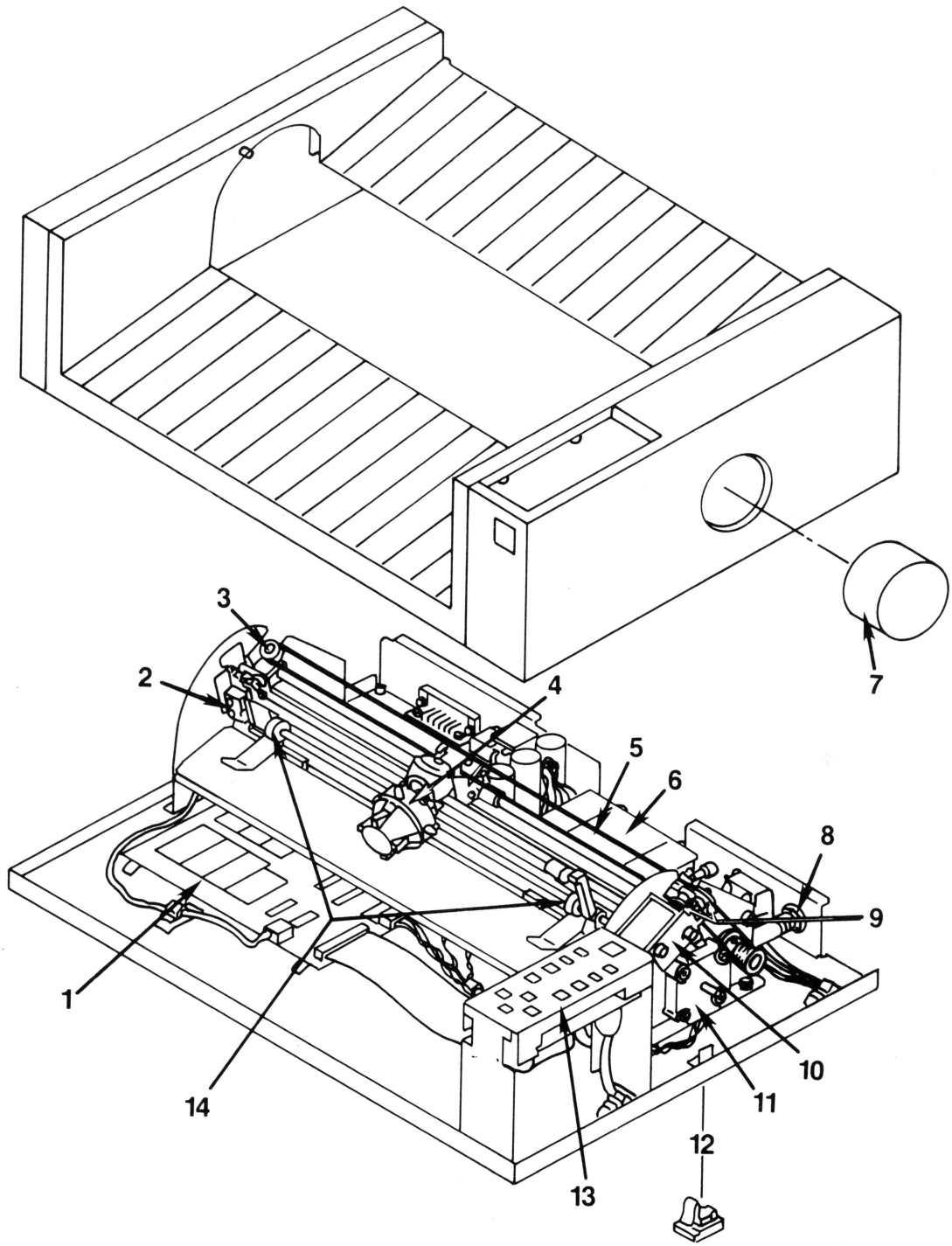

Remove Cover

1. Unplug the plotter.

2. Remove the pens from the pen carriage.

3. Turn the plotter over and set it on its top, being careful that the plastic cover remains closed.

4. Remove the black tab (Figure 1, #12) from the bottom plate of the plotter. It is located on the left side of the plotter directly over the paper feed knob (Figure 1, #7). (Little raised arrows on the tab indicate which direction to push the tab before lifting it off.)

5. To remove the paper feed knob, loosen the two set screws on the knob shaft by inserting the allen wrench in the hole made by the removal of the black tab (Figure 1, #12). (Push knob in to turn shaft.) Pull the knob free.

6. Remove the four phillips head screws from the bottom plate.

7. Set the plotter on its feet.

8. Lift the cover free.

Replace Cover

First check that all five connectors are in place with the cables in the clamps. Check that the carriage wire is wound correctly and sitting in the pulley guides.

1. Place the cover on the base.

2. Turn the plotter over and set it on its top, being careful that the plastic cover remains closed.

3. Replace the paper-feed knob and tighten the set screws.

4. Reinsert the black tab on the bottom plate.

apple computer inc.

FIGURE 2

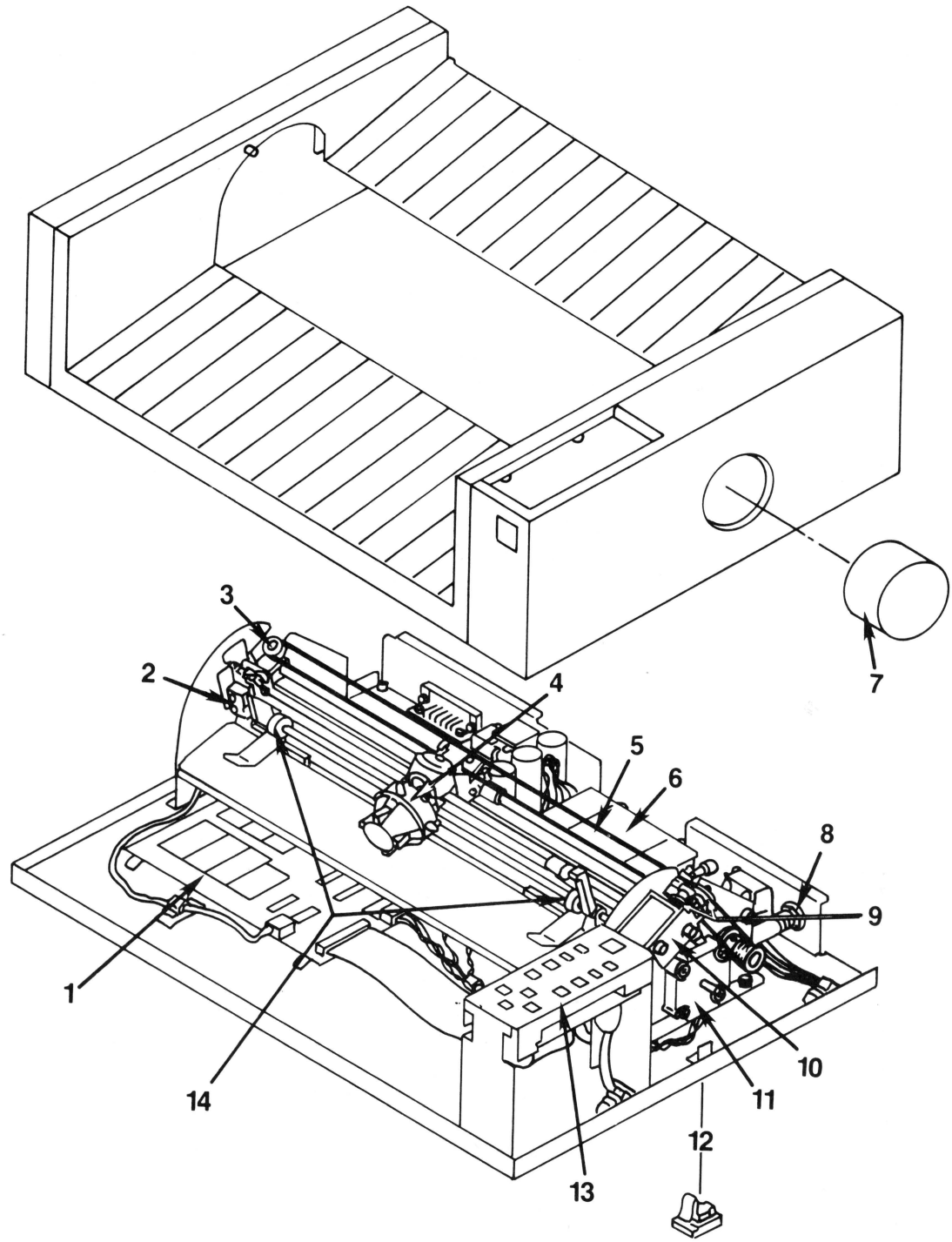

Remove Carriage/Bed Assembly

1. Remove cover.
2. Remove the four phillips head screws, two from either side of the carriage/bed assembly.
3. Disconnect the four cables (all except the transformer cable) from the main PC board and from the two routing clamps which hold the cables to the base. (To release the cables push down on the outside of the clamp and pull up on the body.) You may have to lift the carriage/bed assembly to access two of the connectors.
4. Remove the carriage/bed.

Replace Carriage/Bed Assembly

1. Set the carriage/bed assembly on the base.
2. Connect the cables to the PC board. (The two motor cables are connected to the PC board under the carriage/bed assembly. The rear motor is connected at CN4. The front motor is connected at CN5. The solenoid cable is fed under the carriage/bed assembly to CN3. The home position switch is connected at CN7.) Put the cables in the two clamps which hold the cables to the base.
3. Replace the four screws.
4. Replace the cover.

Remove Main PC Board - Figure 2, #1.

1. Remove the cover.
2. Remove the carriage/bed assembly.
3. Disconnect the transformer connector.

apple computer inc.

FIGURE 3

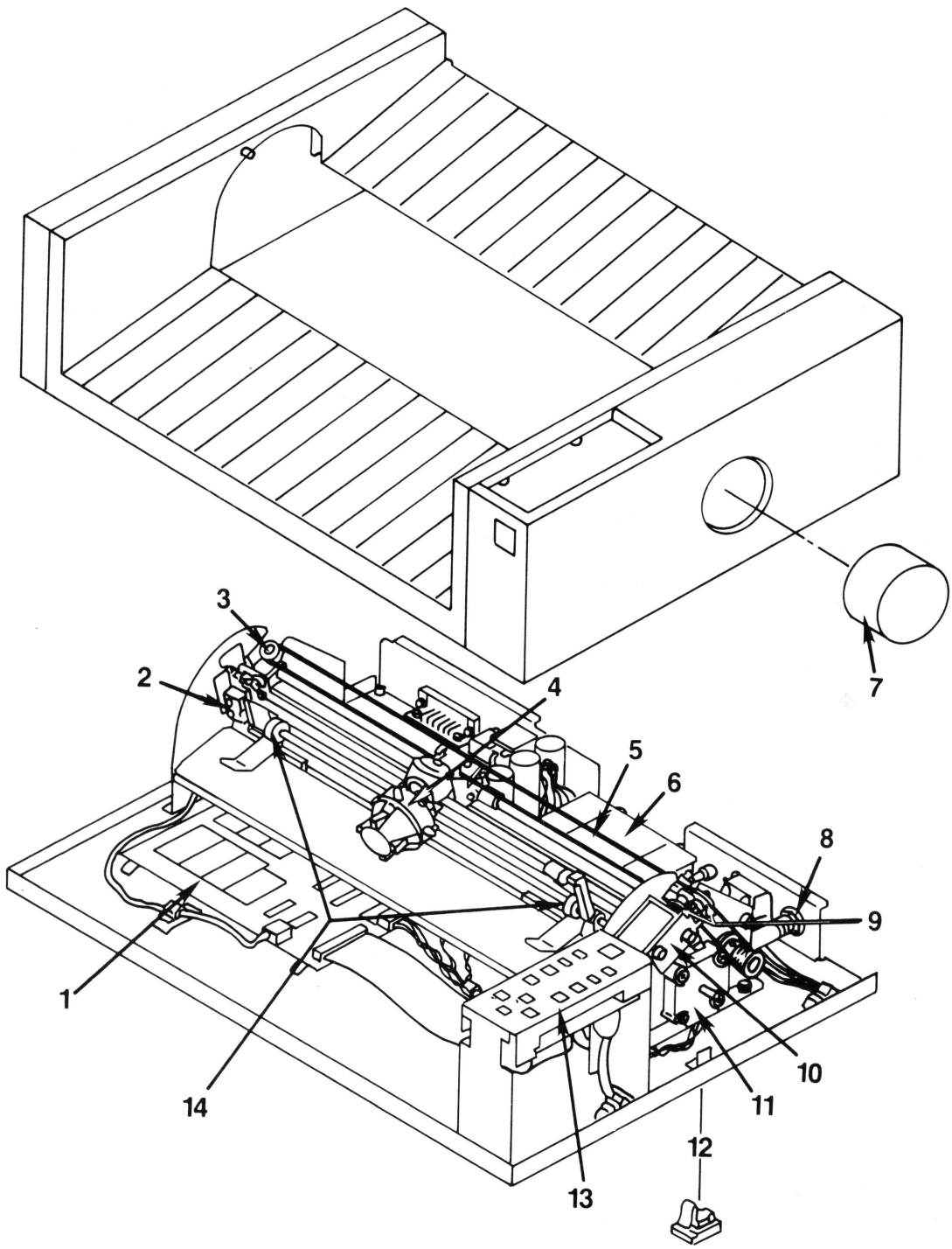

4. Disconnect the keyboard connector.

   Caution: The ribbon cable is attached by a strip connector. To remove the cable, grasp it as close to the connector as possible and pull to the right as you gently wriggle it out.

5. The PC board is attached to the base by four stand-offs and by two screws which are threaded through a bracket mounted to the back of the PC board.

   Remove the phillips screws on the far right and left sides of the PC board bracket. Push in the stand-offs and carefully lift the board from the base.

Replace Main PC Board

1. Place the PC board on the base and push down to engage the stand-offs.
2. Replace the screws.
3. Connect the transformer and keyboard connector.
4. Replace the carriage/bed assembly.
5. Replace the cover.

Remove Keyboard Assembly - Figure 3, #13.

1. Remove the cover.
2. Disconnect the ribbon cable from the main PC board.

   Caution: The ribbon cable is attached by a strip connector. To remove the cable, grasp it as close to the connector as possible and gently wriggle it out.

3. Remove the two phillips head screws which attach the keyboard assembly to the base.
4. Remove the ON/OFF switch wires from the routing clamps on the base.

5. Remove the ON/OFF switch from the keyboard assembly by removing the phillips head screw and lock washer.

Replace Keyboard Assembly

1. Place the ON/OFF switch in the new keyboard assembly. Screw in phillips head screw and lock washer to hold it in place.

2. Place the keyboard assembly on the bottom plate. Put the leads from the ON/OFF switch in the routing clamps. Tighten down the two sets of phillips head screws and lock washers.

3. Connect the ribbon cable to the main PC board.

4. Replace the cover.

Remove ON/OFF Switch

The ON/OFF switch is located on the keyboard assembly.

1. Remove the cover.

2. Disconnect the ON/OFF switch from keyboard by removing the phillips screw and lock washer from the back of the keyboard.

3. Carefully cut off the shrink tubing with an X-acto knife.

4. Use a soldering iron to remove the cables from the terminals.

Replace ON/OFF switch

1. Slide an approximately 4 cm (1 1/2 inch) piece of approximately 1.8 cm (3/4 inch) diameter shrink tubing over the leads.

   WARNING: You must replace the shrink tubing to avoid the possibility of electric shock.

FIGURE 4

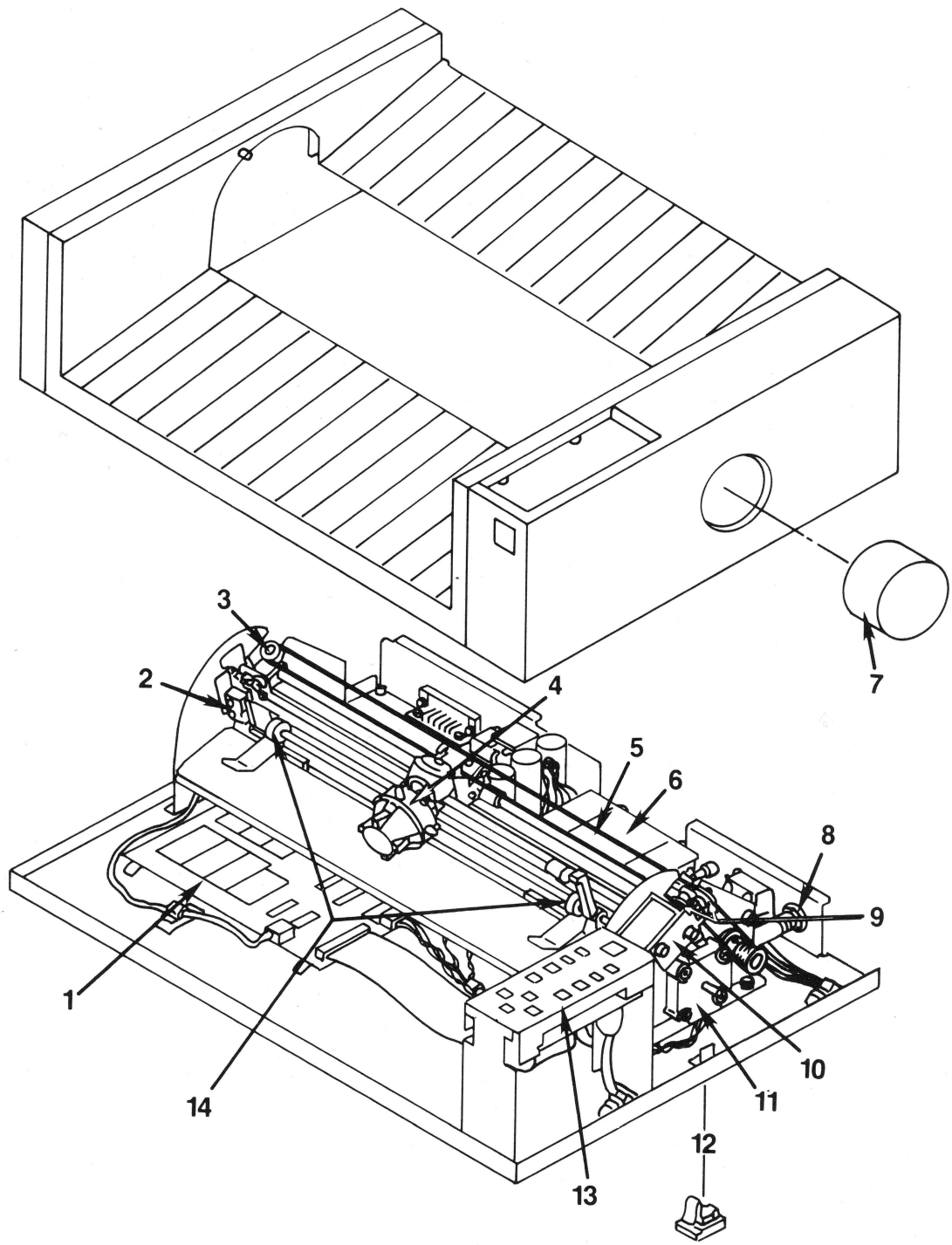

2. Solder the leads to the switch. With the switch in the installed orientation, like-colored leads should be on the same side. The thicker leads should be attached to the center terminals. The thinner leads should be attached to the bottom terminals.

3. Slide the shrink tubing up over the terminals and heat it until snug.

4. Attach the ON/OFF switch to the keyboard assembly with the phillips head screw and lock washer.

5. Push switch in and out to be sure it works and is installed properly.

6. Replace the cover.

Remove Transformer - Figure 4, #6.

1. Remove the cover.

2. Remove the carriage/bed assembly.

3. Disconnect the transformer connector from the main PC board.

4. Remove the four screws that attach the transformer to the base plate.

5. Cut the cable-tie at the AC power socket.

6. Release the wires from the routing clamps.

7. Remove the ON/OFF switch from the keyboard assembly.

8. Desolder <u>all</u> the leads from the ON/OFF switch.

   NOTE: This will allow you to install new shrink tubing.

apple computer inc.

FIGURE 5

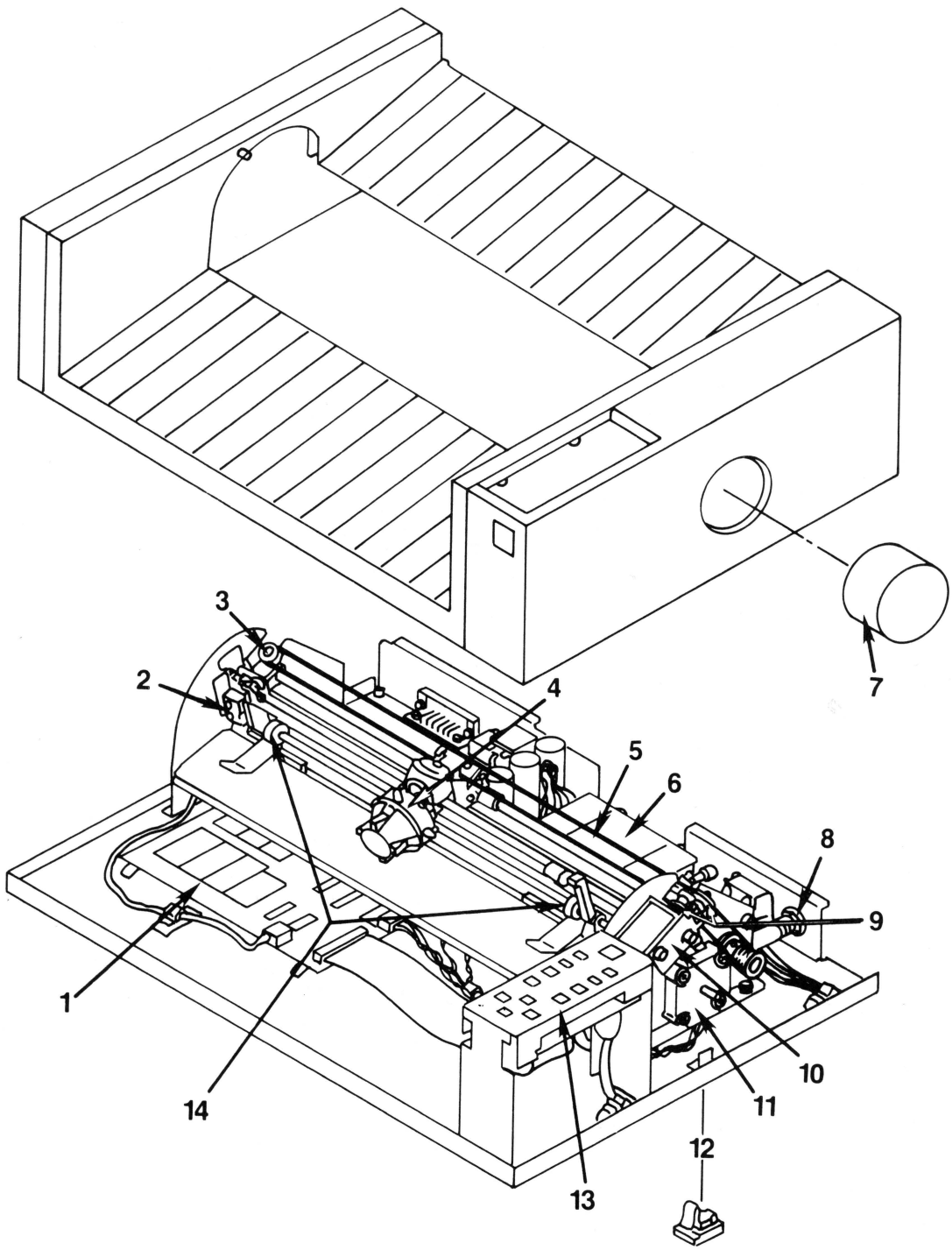

Replace Transformer

1. Slide an approximately 4 cm (1 1/2 inch) piece of approximately 1.8 cm (3/4 inch) diameter shrink tubing over the ON/OFF switch leads.

   WARNING: You must replace the shrink tubing to prevent the possibility of electric shock.

2. Solder the leads to the switch. With the switch in the correct orientation, like-colored leads should be on the same side. The thicker leads should be attached to the center terminals. The thinner leads should be attached to the bottom terminals.

3. Slide the shrink tubing up and apply heat to shrink it.

4. Replace the ON/OFF switch.

5. Wind the leads from the ON/OFF switch through the routing clamps back toward the transformer. Lock the clamps.

6. Screw down the transformer.

7. Connect the transformer connector to the main PC board.

8. Gather the AC power wires and the transformer power wires into a cable-tie.

9. Replace the carriage/bed assembly.

10. Replace the cover.

Remove Paper Feed (Roller) Motor - Figure 5, #11.

This motor is the front motor on the right end of the carriage/bed assembly

1. Remove the cover.

2. Remove the carriage/bed assembly from the base.

3. Remove the nuts from the motor using a 5.5 mm nutdriver.

4. Pull the motor out. (The roller will come with it.)

FIGURE 6

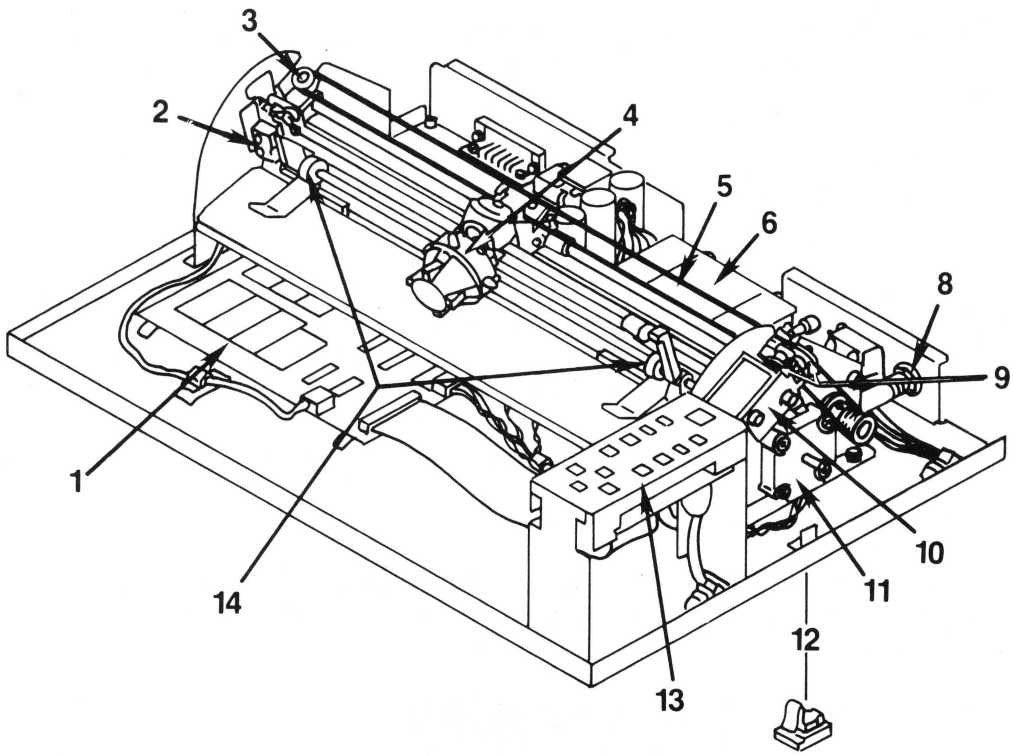

FIGURE 7

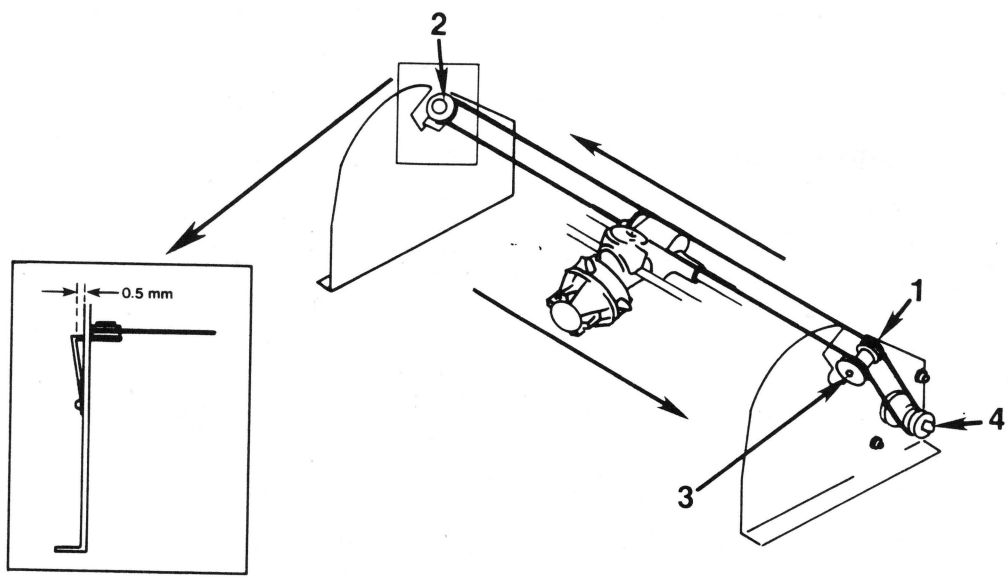

5. Use an allen wrench to loosen the set screws that attach the motor to the roller. Pull the roller and motor apart.

   Note: You may have to use a large flatblade screwdriver to separate them.

Replace Paper Feed (Roller) Motor

1. Place the new motor on the roller with a gap of approximately 1.5 mm (1/16 inch) between the roller and motor. Tighten the set screws.

2. Orient the motor so the wires exit downward.

3. Slide the roller and motor back into place. (The motor should fit snugly to the frame.) If you are having trouble, try the following:

   - Line up the motor mounting screws with the carriage bed assembly.

   - Depress the right feed roller arm and/or the left feed roller tab (Figure 6, #14) to give the roller more room to move.

   - Poke a small screwdriver through the hole in the left outside of the carriage/bed assembly to maneuver the end of the roller into place.

4. Replace the nuts, tightening alternately (the star washer goes with the top nut).

5. Replace the carriage/bed assembly.

6. Replace the cover.

Remove and Replace Left Pulley Assembly - Figure 6, #3.

The left pulley assembly attaches the left pulley to the carriage/bed assembly.

1. Put a piece of tape on the motor pulley (Figure 7, #4) so that the carriage wire will not unwind.

FIGURE 8

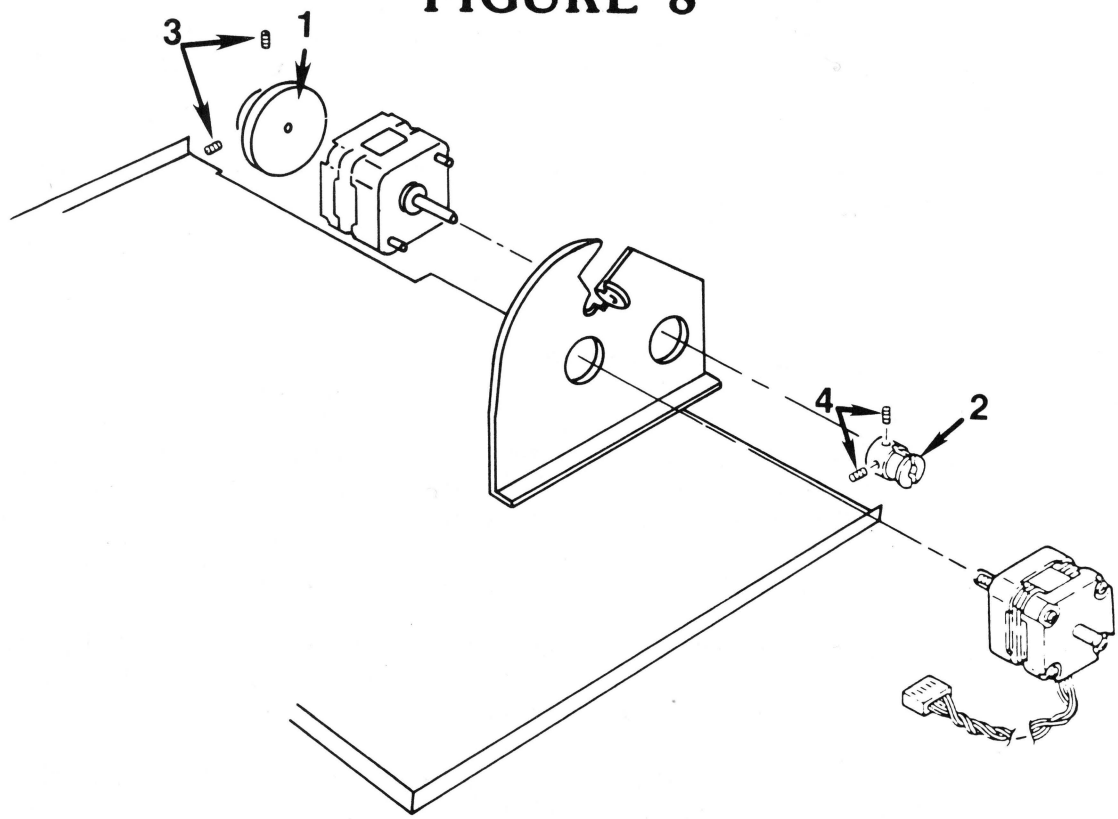

FIGURE 9

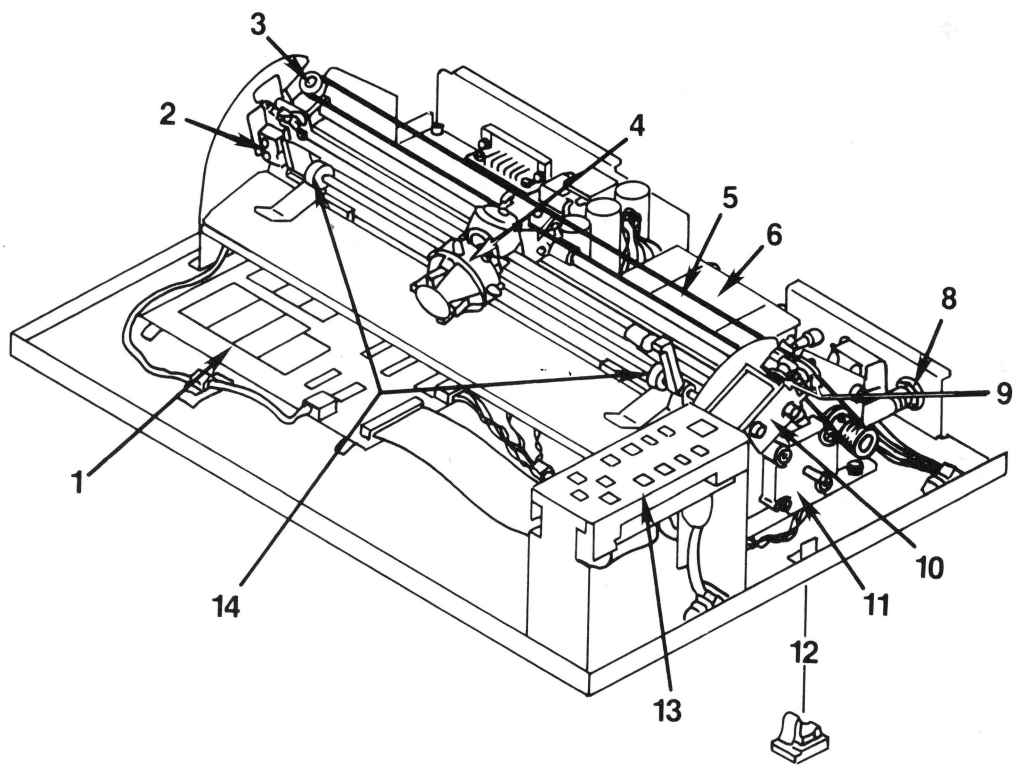

2. Remove and replace the left pulley assembly by removing and replacing the mounting screw on the bracket.

   NOTE: When in place, the pulley should be inside the frame of the carriage assembly. (See Figure 7, insert.)

3. Remove the tape from the motor pulley.

Remove Pulley Motor

This motor is the rear motor on the right end of the carriage/bed assembly.

1. To remove the flywheel (Figure 8, #1), rotate the motor pulley (Figure 8, #2) and flywheel so that the hole in the flywheel lines up with the set screws (Figure 8, #3) in the shaft. Loosen the two set screws.

2. Slide the flywheel off.

3. Slide the pen carriage (Figure 9, #4) to the middle of the carriage/bed assembly.

4. Loosen the retaining clamp screw (the easily visible phillips head screw on top of the pen carriage assembly that holds the carriage wire).

FIGURE 10

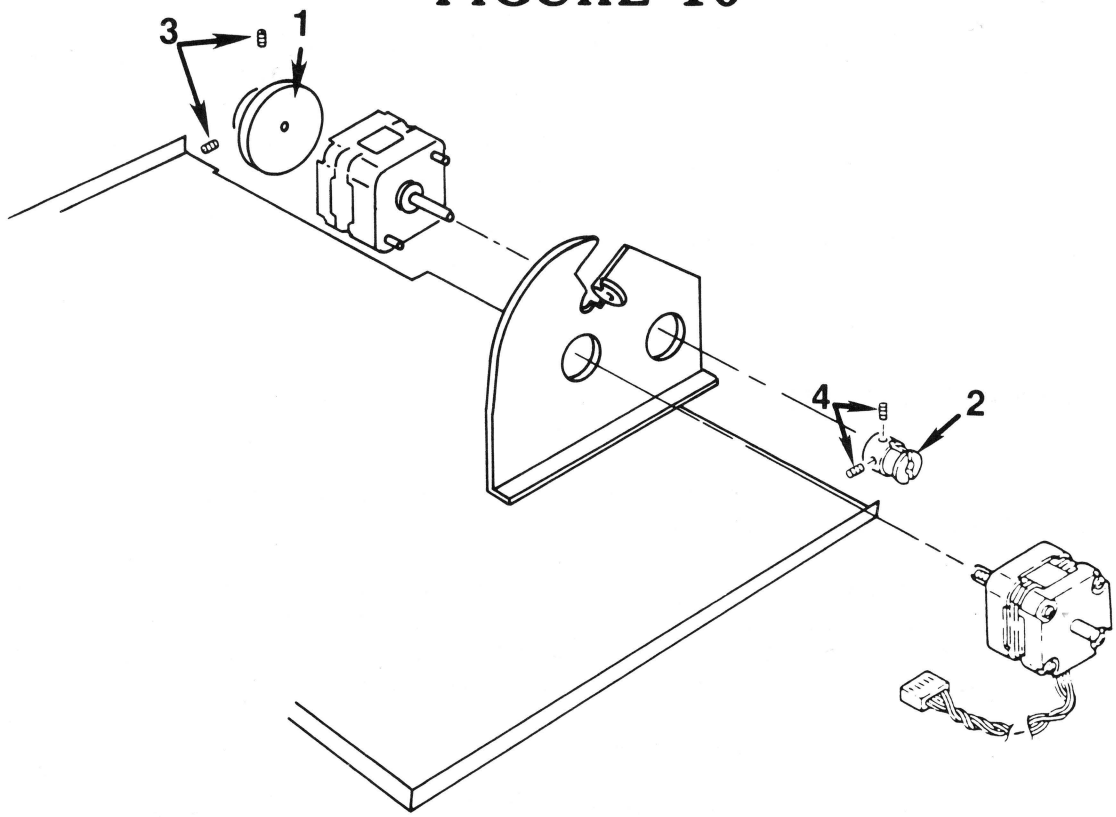

FIGURE II

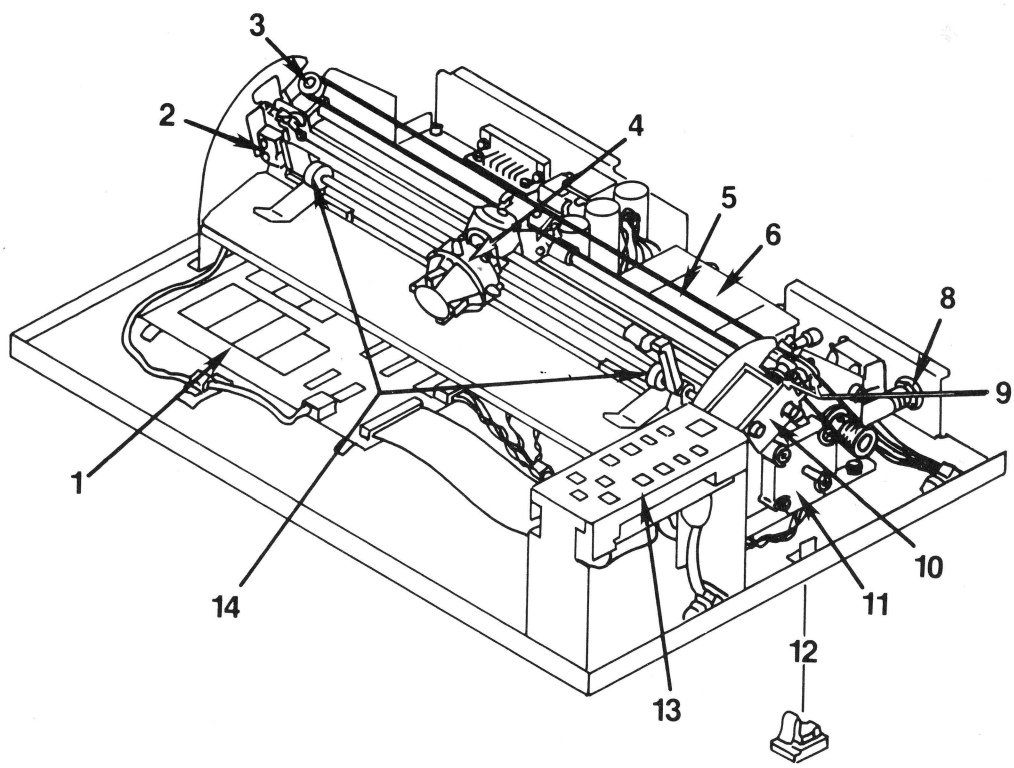

5. Loosen the two set screws (Figure 10, #4) on the motor pulley.

6. To ensure the carriage wire does not unwrap during the following steps, put some tape around the wrapped wires on the motor pulley.

7. Release the carriage wire tension by loosening the nuts on the pulley motor.

8. To further release the carriage wire tension, loosen but do not remove the mounting screw for the left pulley assembly. (Figure 11, #3.)

9. Slide the wire off the left pulley assembly. Gently but firmly pull the pulley away from the pulley motor. (You may have to use a flatblade screwdriver to pry it loose.)

10. Remove the nuts from the screws that hold the motor in place.

11. Remove the motor.

FIGURE 12

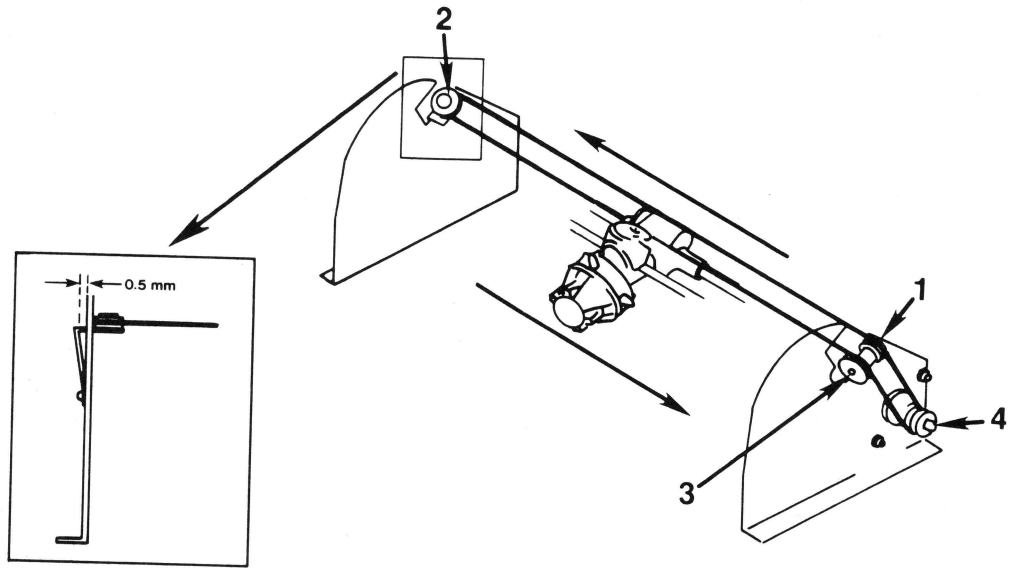

FIGURE 13

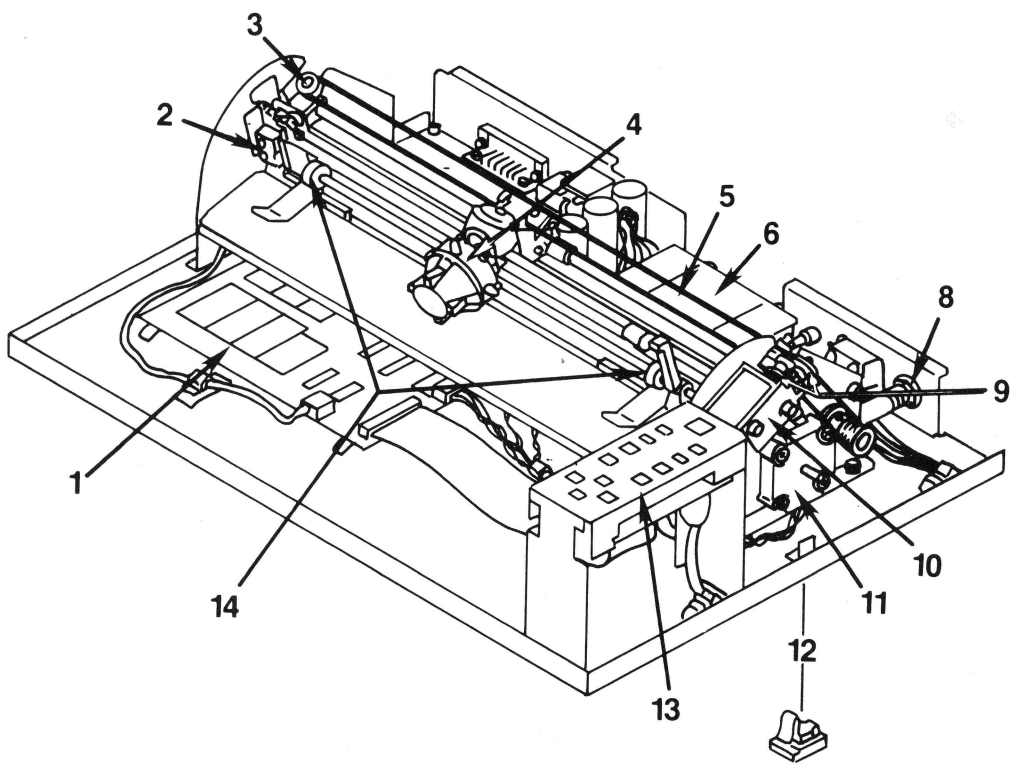

Replace Pulley Motor

1. Put the motor into place (wires exiting downward).
2. Loosely replace the nuts for the motor (star washer belongs with top nut).
3. Slide the pulley back onto the motor. There should be an approximately 1.5 mm (1/16 inch) gap between the pulley and the side of the carriage/bed assembly.
4. Slide the carriage wire back over the left pulley. Ensure that the carriage wire is correctly mounted on the guide pulleys.
5. Remove the tape from the motor pulley and tighten down the set screws.
6. Tighten the left pulley-assembly mounting screw.
7. Turn the motor pulley until it has an equal number of turns on either side of where the carriage wire leaves the motor pulley.
8. Ensure that the pen carriage is in the middle of the carriage/bed assembly.
9. Place the carriage wire under the retaining clamp on the pen carriage. Tighten the retaining clamp screw.
10. Adjust the wire tension (see Carriage Wire Adjustment section) and tighten down motor pulley nuts.
11. Replace the flywheel. There should be an approximately 3 mm (1/8 inch) gap between the flywheel and the motor. Alternately tighten the set screws until they are completely tight.

Replace Carriage Wire - Figure 13, #5.

Replace the wire if it is kinked, worn, or otherwise damaged.

1. Cut or otherwise remove the old wire.

   NOTE: Treat the new wire gently. It kinks easily.

FIGURE 14

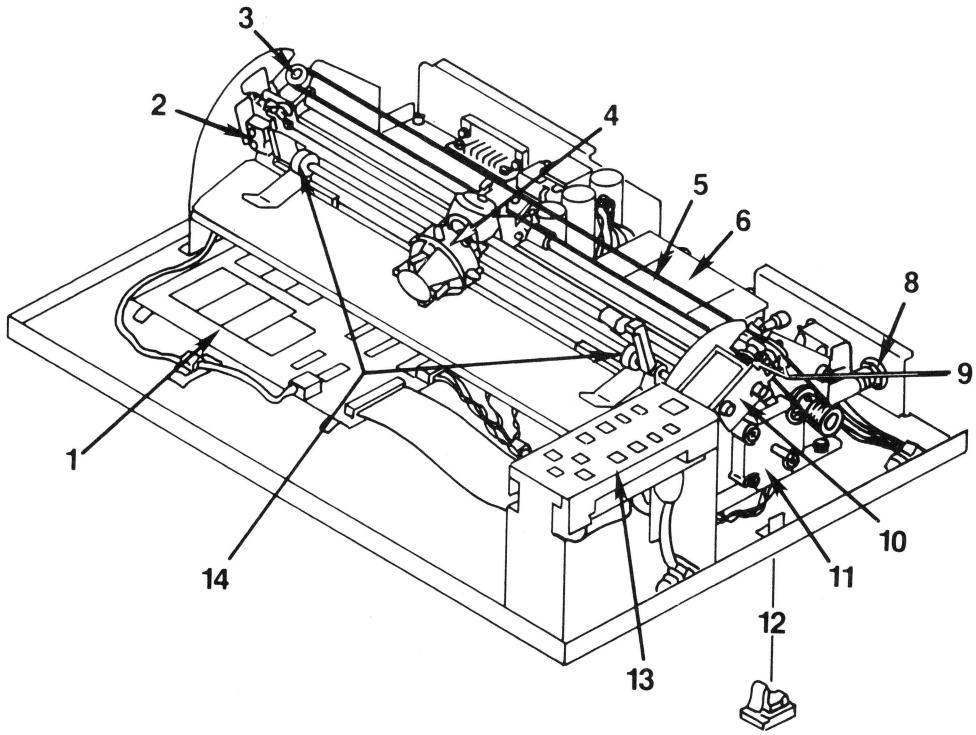

FIGURE 15

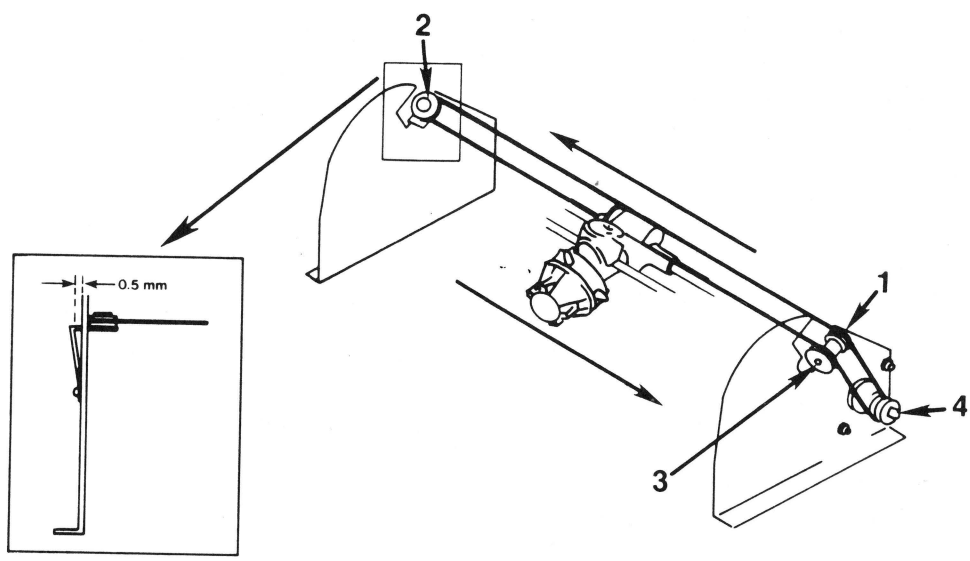

2. Loosen but do not remove the nuts on the pulley motor and the mounting screw for the left pulley assembly (Figure 14, #3).

3. Loosen the retaining clamp screw on the pen carriage (Figure 14, #4).

4. Tear off a piece of tape and leave it easily accessible.

5. There are two slots in the motor pulley (Figure 15, #4). Insert one end of the carriage wire into the long slot (Figure 16) and slide it to the inside (center) of the pulley.

FIGURE 16

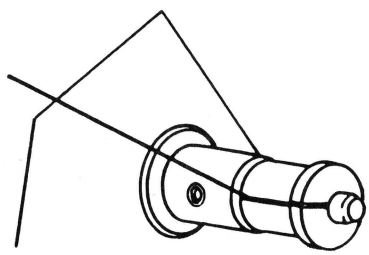

6. Keeping the wire taut, manually wind the wire onto the pulley by rotating the pulley clockwise nine revolutions.

   NOTE: Make sure the loops of the wire do not overlap.

   Once the wire is wound, hold it down with the tape.

FIGURE 17

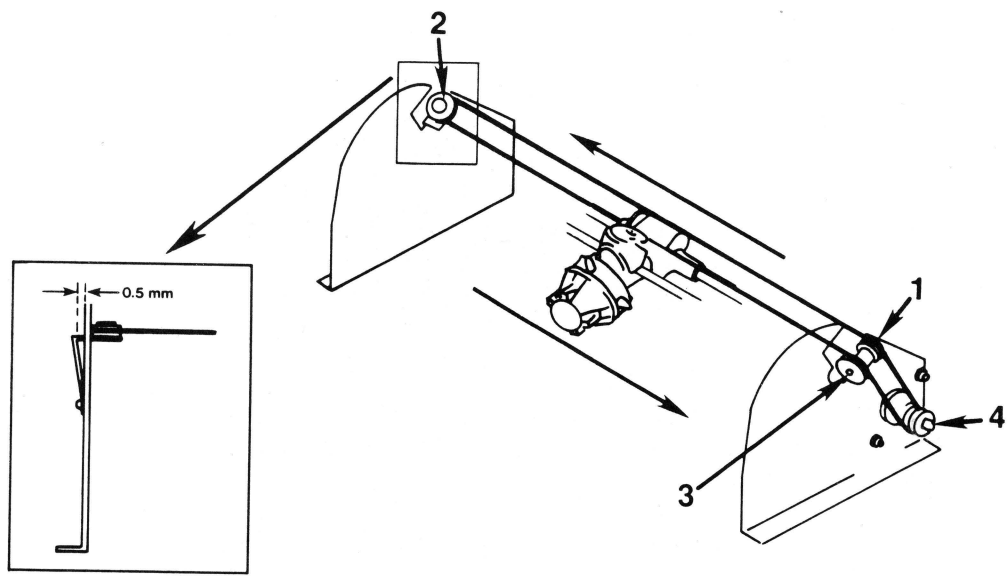

7. Thread the wire around the guide pulleys, following the arrows, in numerical order as shown in Figure 17, #1, #2, and #3.

8. Place the tape on the motor pulley so that you can access the short slot of the pulley.

9. Slip the end of the carriage wire into the short slot of the motor pulley. (See Figure 18.) This should be a tight fit. If it isn't tight, give the pulley another revolution.

FIGURE 18

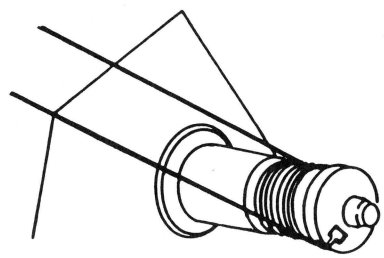

(If you have trouble slipping the wire into place, remove the wire from the left guide pulley, slide the wire end into place, and then pull the wire back onto the guide pulley.)

10. Tighten the mounting screw for the left guide pulley.

11. Adjust the wire tension (see steps in the following section).

12. Remove the tape from the pulley motor.

13. Turn the motor pulley until it has an equal number of turns on either side of where the carriage wire leaves the motor pulley.

14. Slide the pen carriage to approximately the middle of the carriage/bed assembly.

15. Place the carriage wire closest to you under the retaining clamp on the pen carriage. Tighten the retaining clamp screw.

FIGURE 19

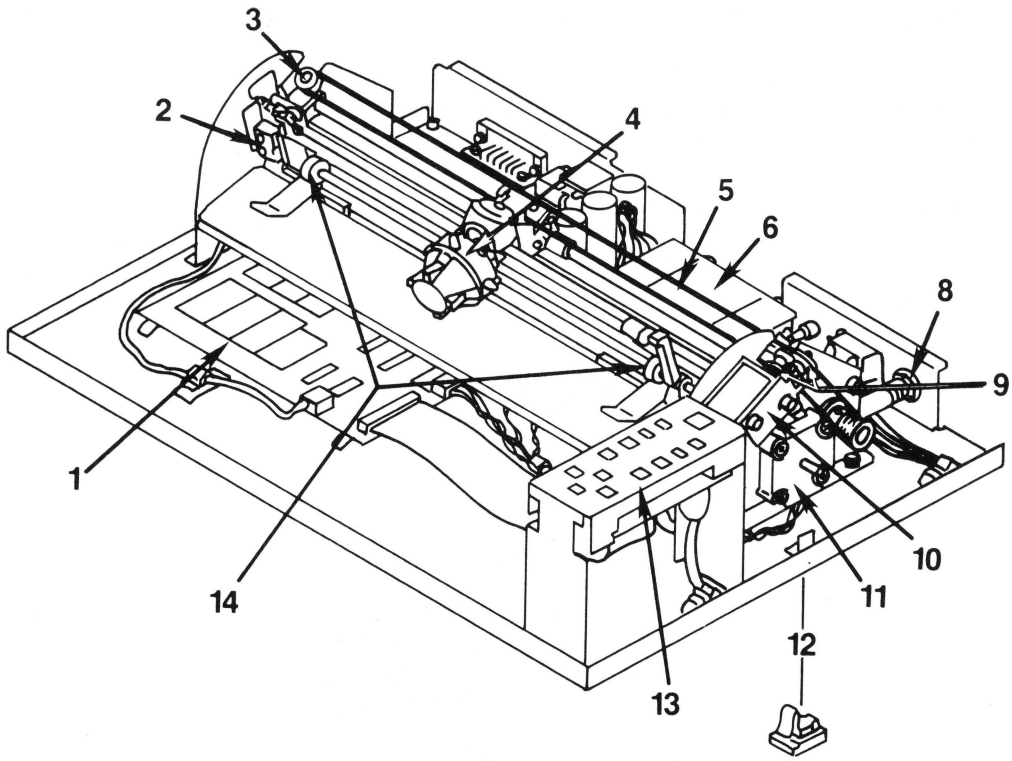

FIGURE 20

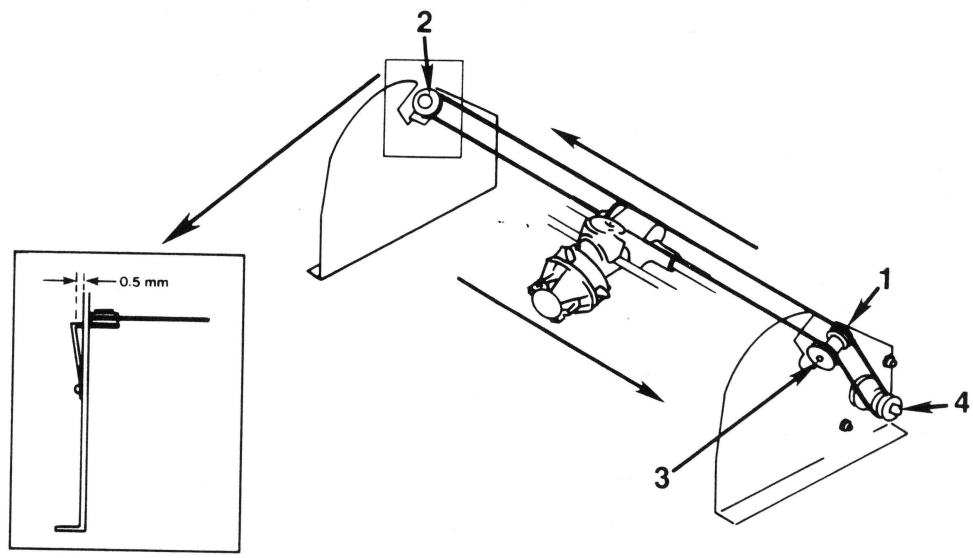

16. Slide the pen carriage back and forth to check that it can reach both ends of the carriage/bed assembly. (Note: The right feed-roller should be to the far right.)

    If the pen carriage cannot reach both ends, loosen the retaining clamp on the carriage assembly, move the pen carriage in the direction that was difficult to reach, and then tighten the retaining clamp and try it again.

Adjust Carriage Wire Tension

Read the following two paragraphs before proceeding with the numbered steps.

The carriage wire tension is adjusted by rotating the pulley motor.

The wire tension is correctly adjusted when the left pulley assembly (Figure 19, #3) is approximately 0.5 mm (1/48 inch) from the carriage/bed assembly when measured at the upper end of the left pulley assembly. (See insert, Figure 20.)

To adjust the tension:

1. Loosen the nuts which attach the pulley motor to the carriage/bed assembly.

2. Adjust the carriage wire tension by rotating the motor while watching the gap at the upper end of the left pulley assembly. When the gap is approximately .5 mm (1/48 inch), tighten down the bolts.

3. Tighten the nuts when the pulley assembly is correctly adjusted.

NOTE: If you were replacing the carriage wire, return to step 12 of the Replace Carriage Wire section above and continue from there.

NOTE: If you were replacing the pulley motor, return to step 10 of Replace Pulley Motor and continue from there.

FIGURE 21

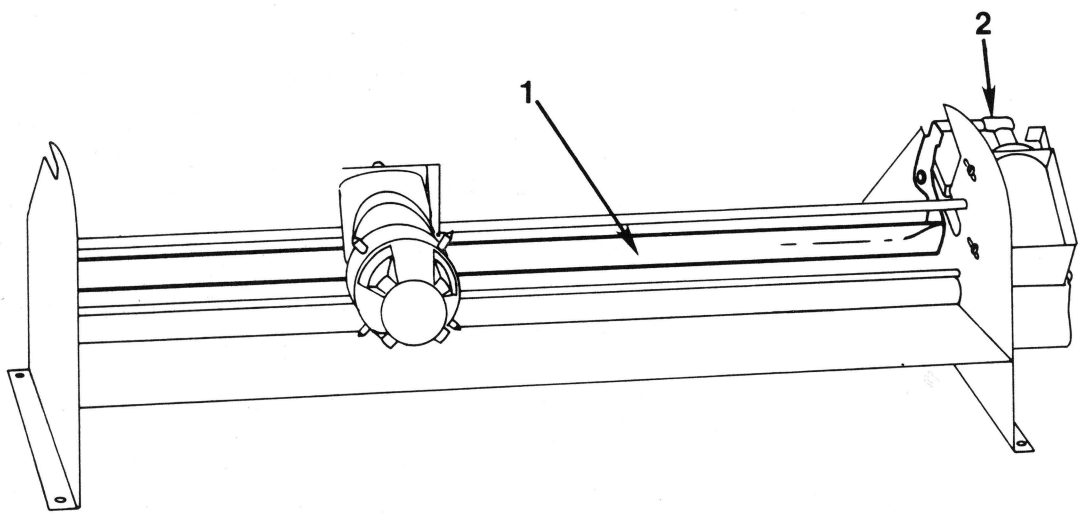

Remove and Replace Solenoid - Figure 21, #2

The solenoid moves the pen carriage up and down.

1. To remove the solenoid, remove the two screws which attach it to the carriage/bed assembly.

2. Replace the solenoid by loosely tightening the solenoid screws, adjusting the solenoid, and then tightening down the screws.

Solenoid Adjustment

Read the following paragraphs before doing the numbered steps.

The solenoid adjustment determines the pen height. In making this adjustment you are concerned with the solenoid, bail, bail lever, and pen carriage.

Look underneath the pen carriage to see where the bail (Figure 21, #1) comes into contact with the pen carriage. Push in bail lever to depress the cylinder on top of the solenoid (Figure 21, #2). Watch the bail move.

The gap between the bail and the pen carriage should be approximately 1 mm (measured when an uncapped pen is touching the platter and the solenoid cylinder is pushed in).

To adjust:

1. Put uncapped pens in pen carriage.

2. Loosen but do not remove the screws which attach the solenoid to the carriage/bed assembly.

3. Push in the solenoid cylinder by depressing the bail lever.

4. With the solenoid cylinder still depressed, guide the solenoid up and down to adjust the gap between the bail and pen carriage. Guide the solenoid up to lessen the gap.

5. When the gap is approximately 1 mm (1/24 inch) tighten the solenoid screws.

apple computer inc.

FIGURE 22

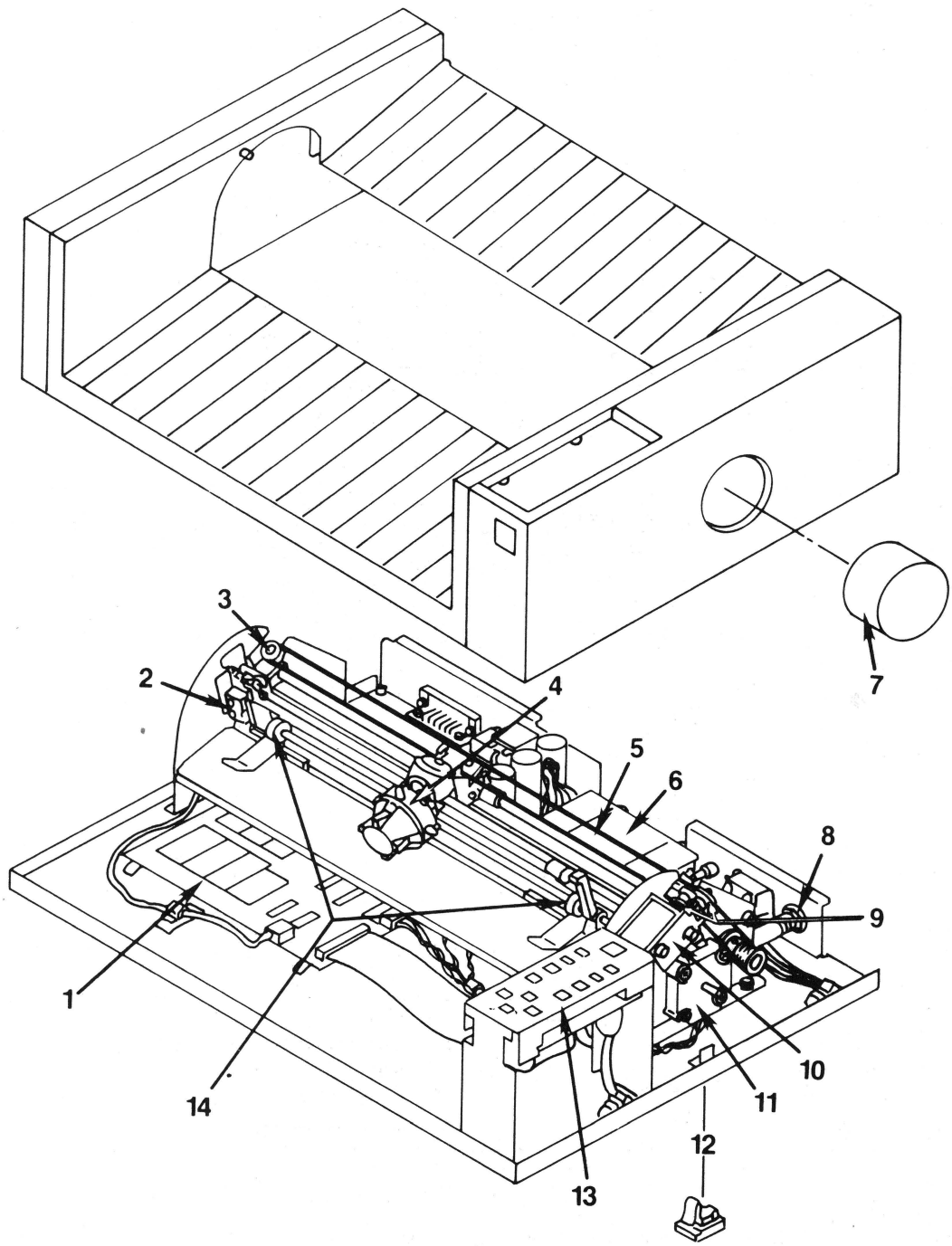

Remove and Replace Home Position Switch Assembly - Figure 22, #2.

1. Disconnect the home position switch connector (CN7) from the PC board.

2. Remove the screw and washer which hold the switch bracket in place.

3. Replace the home position switch assembly and its screw.

   NOTE: When installed, the switch and bracket should be parallel with the sides of the rectangular cut-out in the carriage/bed.

4. Feed wires back through circular hole in the left side of the carriage/bed assembly so that the connector comes out under the carriage/bed.

5. Connect the home position switch connector to the PC board.

Remove Pen Carriage Assembly - Figure 22, #4.

To remove the pen carriage assembly you will have to remove the two bars to which it is attached. Turn the plotter so that it is facing you.

To remove the rear bar:

1. Remove the pens from the carriage.

2. Put tape around the wires on the motor pulley.

3. Loosen the wire-retaining-clamp screw of the pen carriage.

4. Remove the left pulley assembly (Figure 22, #3).

5. Remove the e-clip on the far right of the bar (outside of the carriage/bed) using needlenose pliers. Slide the bar out.

FIGURE 23

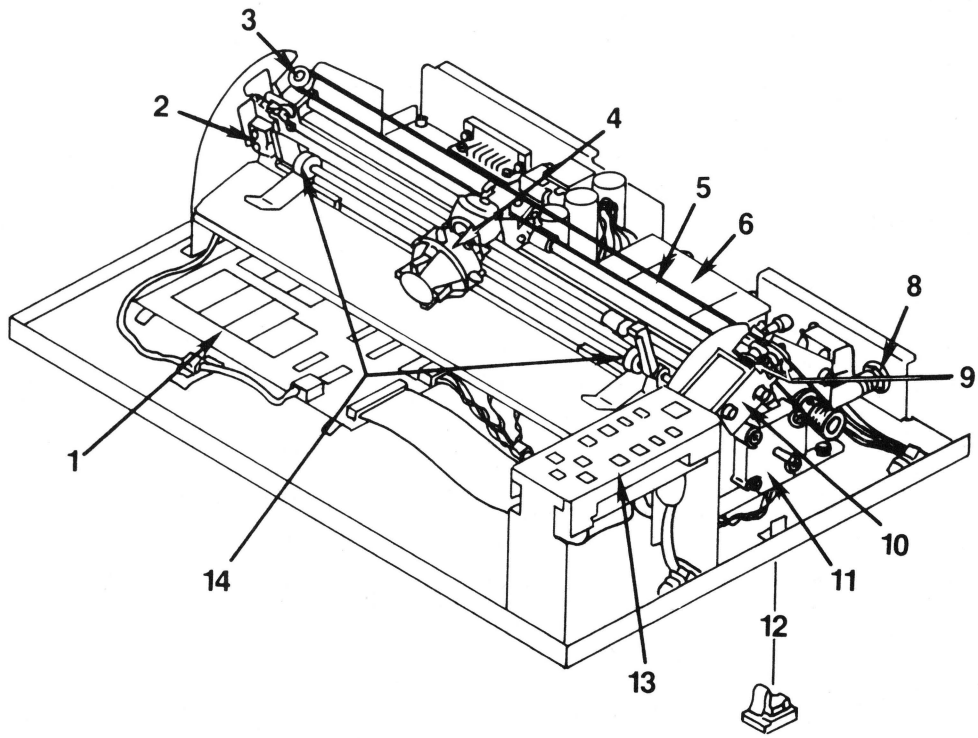

FIGURE 24

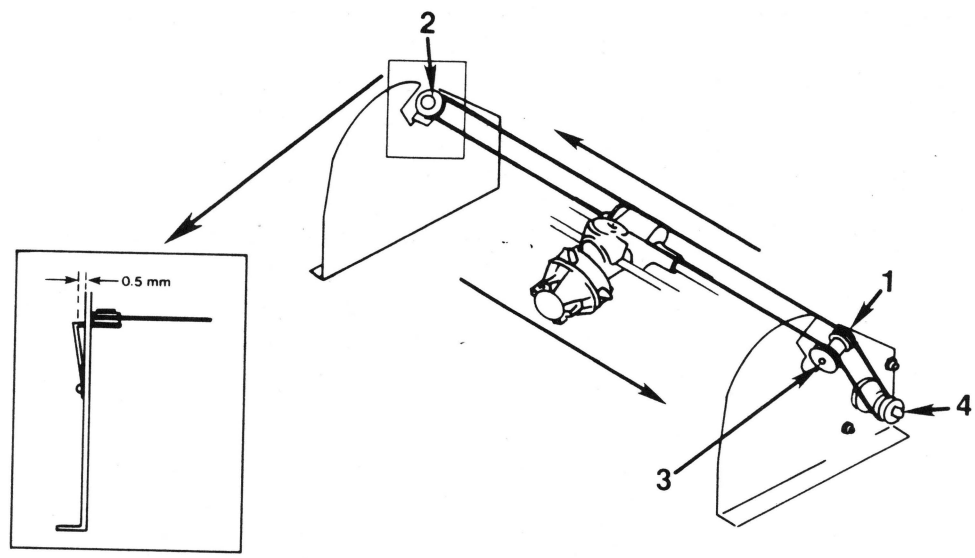

To remove the front bar:

6. Remove the screw and washer that holds in place the front bar (and the home position switch bracket [Figure 23, #2]). Pull this bar out. The pen carriage assembly is now free.

Replace Pen Carriage Assembly

1. Replace the rear bar, threading it through the pen carriage. Replace the left guide pulley. Put the e-clip in place.

2. Replace the forward bar, threading it through the pen carriage.

3. Replace the home position switch and tighten the screw.

   NOTE: When installed, the switch and bracket are parallel with the rectangular cut-out in the carriage/bed.

4. Replace the left pulley assembly.

   NOTE: When in place, the pulley should be inside the frame of the carriage assembly. (See Figure 24, insert.)

5. Put the carriage wire over the left pulley.

6. Put the carriage wire under the retaining clamp of the pen carriage and tighten the screw.

7. Check the guide pulleys (Figure 23, #3 and #9) and the motor pulley to see that the carriage wire is wound correctly.

8. Check the carriage wire tension.

Remove and Replace Fuse Figure 23, #8.

1. Use a flatblade screwdriver to turn fuse cover 1/4 turn to the left.

2. Put new fuse in cover and replace the cover.

FIGURE 25

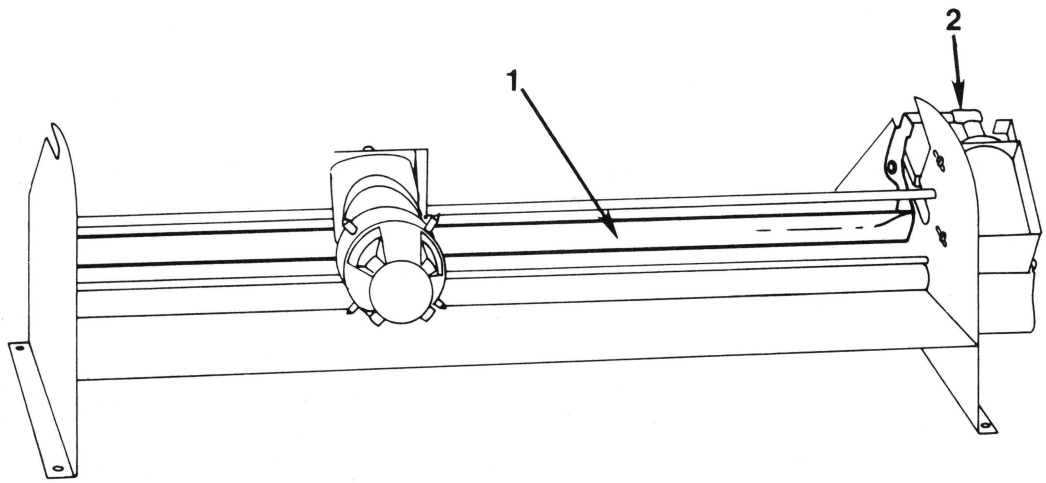

FIGURE 26

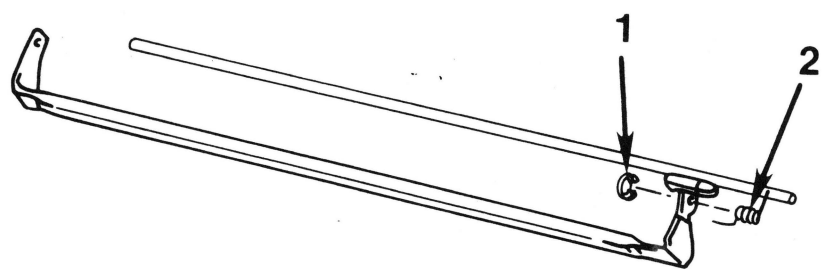

Remove Bail Spring

The bail is the rod that is moved by the solenoid (Figure 25, #1). The spring is on the far right side of the bail, inside the carriage/bed.

1. Remove the e-clip using needlenose pliers (Figure 26, #1).

2. Gently slide the bail to the left, up, and toward you so you can get at the spring.

   NOTE: Be careful. The bail is flexible and you can easily bend it out of shape.

3. Remove the spring.

Replace Bail Spring

1. Put the spring back on the assembly. The right-angle side should be to the left.

2. Replace the bail and the e-clip.

3. The straight end of the spring should lie on top of the rear bar. (See Figure 26, #2.) The right-angled side should lie on top of the bail.

apple computer inc.

Apple Color Plotter Technical Procedures

Section 4

Exploded Diagram and Parts List

Contents:

Exploded Diagram.....4.2
Parts List and Location.....4.3

apple computer inc. **FIGURE 1**

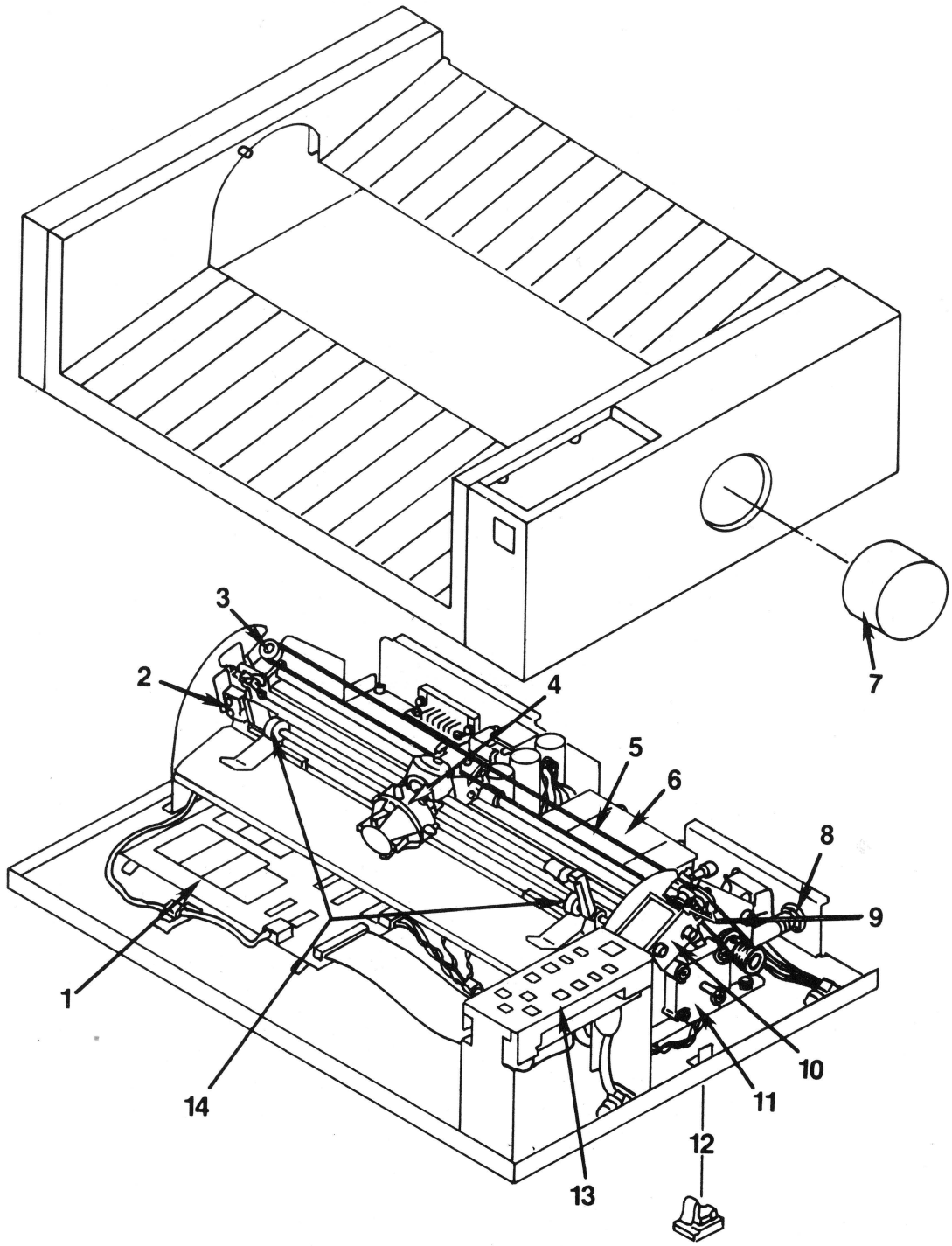

apple computer inc.

Parts List and Location on Figure 1

Fig. No.	Part Name	Part No.
1	Main PC board	699-0204
2	Home Position Switch Assembly	970-0592
3	Left Pulley Assembly	970-0595
4	Pen Carriage Assembly	970-0588
5	Carriage Wire	970-0587
6	Transformer	970-0583
7	Knob/clutch Assembly	970-0597
8	Fuse	740-0203
9	Spring (located rt. side of bail)	970-0593
10	Solenoid Assembly	970-0589
11	Paper Feed Motor (pulley motor same part no.)	970-0590
12	Tab	no number
13	Keyboard Assembly	970-0585
14	Feed rollers	no number
	On/off Switch (AC switch) (in keyboard assy.)	970-0586

SERVICE AND SUPPORT NOTICE

APPLE MODEMS

A. OVERVIEW

Apple has two new modems to provide asynchronous communication capabilities for all Apple Computers. The Apple Modem 300 and the Apple Modem 1200 use the telephone system to communicate to other computers. The Apple Modem 300 operates at 0 to 300 bits per second (bps). The Apple Modem 1200 operates at 0 to 300 and 1200 bps. The major operating features of the Apple Modems include:

* Both Apple Modems are "smart" (microprocessor controlled)
* Both Apple Modems are compatible with the Hayes Smartmodem
* The Modem 300 is signaling compatible with the Bell 103
* The Modem 1200 is signaling compatible with the Bell 212A

B. SERVICE AND SUPPORT

Apple Modems may be serviced by **module exchange.** All failed modules should be shipped to the Service Department at your Apple Support Center for exchange. Great care must be exercised in packing and shipping the Apple Modem. **All Modem Printed Circuit Boards (PCBs) must be shipped in a plastic shipping cover.**

C. SERVICE TRAINING

Service training for repairs to the Apple Modems is contained in the Technical Procedure (job aid). The Technical Procedure and the Apple Modem Manual will teach you how to repair the Apple Modems.

D. ORDERING PARTS

All dealers planning to sell Apple Modems must develop repair and support capability. There are no Spares Kits for the Apple Modems. Dealers must purchase a Circuit Board for the models they sell.

Service Stock	Part #	Retail	Dealer
Apple Modem 300 Board	661-75165	$ 168.00	$ 126.00
Apple Modem 1200 Board	661-75164	380.00	285.00

Exchange Module prices are as follows:

Exchange Modules	Part #	Retail	Dealer
Apple Modem 300 Board	665-75165	$ 68.00	$ 51.00
Apple Modem 1200 Board	665-75164	80.00	60.00

Replacement Part prices are as follows:

Replacement Parts	Part #	Retail	Dealer
Modem Transformer	076-8077	12.00	9.00
Modem RJ-11 Cable	076-8075	4.00	3.00
Modem Interface Cable	590-0121	16.00	12.00
Macintosh Modem Cable	590-0182	36.00	27.00

E. WARRANTY AND APPLECARE

The customer should incur no charges for repair of his Apple Modem IF the unit is covered under 90 Day Limited Warranty or an AppleCare Carry-in Service Agreement.

AppleCare Carry-In Service is available for the Apple Modems. Here is the information you need to complete your customer's AppleCare contract:

Product	AppleCare Number	Suggested Retail	Dealer Cost
Modem 300	SC20023	$ 18.00	$ 12.00
Modem 1200	SC20024	24.00	15.00

Dealers will be reimbursed for warranty and AppleCare repairs as follows:

Warranty and AppleCare Labor Reimbursement Fee.....$20.00 per product.
\+ Suggested Retail Price of Modules and Replacement Parts used.

The Reimbursement Fee paid on Exchange Modules is also the suggested labor charge for out-of-warranty repairs.

MODEMS TECHNICAL PROCEDURES

TABLE OF CONTENTS

Section 1 - 300/1200 Modems: Troubleshooting and Take-Apart

Troubleshooting:

Introduction.....1.3
Modem Self Test.....1.3
Modem Verification Test.....1.5
Back-to-Back Modem Test.....1.6

Take-Apart:

PCB Removal.....1.9

Section 2 - 300/1200 Modems: Illustrated Parts List

Apple 300/1200 Modems.....2.2
Modem Cables and Connectors.....2.4

Section 3 - Apple Personal Modem

Introduction.....3.2
Equipment Required.....3.2
Power Test.....3.3
Computer Test.....3.4
Self-Test Mode.....3.5

Section 4 - Apple Personal Modem: Illustrated Parts List

Apple Personal Modem and Modem Cables.....4.3

©Apple Computer, Inc., 1985, 1986.
No part of this document may be reproduced in any form without the written permission of Apple Computer, Inc.

Macintosh is a trademark of McIntosh Laboratory, Inc., and is used by Apple Computer, Inc., with its express permission. Apple and the Apple logo are registered trademarks of Apple Computer, Inc.

apple computer

TROUBLESHOOTING

Introduction

Most of the problems with modems will occur during the installation procedures. Other problems may occur only with certain baud rates or modes of operation. The purpose of this document is to give Apple Dealer Service-persons step-by-step checkout procedures to test, evaluate, and diagnose any failure related to the operation of either the Apple 300 or Apple 1200 MODEMs. These procedures can be performed using either an Apple II+, Apple //e or Apple ///. For testing and troubleshooting of modems connected to Macintosh or Lisa systems, refer to the Modem Manual (Part II) for those systems.

A. Modem Self-Test

Equipment Required:

Modem 300/1200 User's Manual (Part 1: Reference)
Apple II+, //e, or /// system with drive and monitor
Apple Term program diskette (Apple Term II or Apple Term III)
Super Serial Card (for Apple II+ or //e only)
Modem 300/1200 User's Manual (Part II for Apple // or ///)
NOTE: There are two Part II manuals, one for Apple II+ and //e systems, and one for Apple /// systems. Use the one that matches your system.

1. Connect the modem to a telephone line according to the instructions on page 14 (start at the top of the page) of the Modem 300/1200 User's Manual (Part 1: Reference).

2. Complete the modem hook-up to your computer according to the instructions in chapter 1 of the Modem 300/1200 User's Manual (Part II).

3. Run the self-test given in chapter 1 (see Testing with the Self-Test Procedure) of the Modem 300/1200 User's Manual (Part II).

4. After completing the self-test, press and hold down the <OPEN-APPLE> key and type "Q" (//e) or hold down the <ESCAPE> key and type "Q" (II+) to return to the main menu.

5. Type "C" to enter the **Change Configuration** menu. You will now select a different speed and repeat the self test.

6. Use the arrow keys (//e) or arrow keys and space bar (II+) to select 110 baud.

7. Repeat steps 3 and 4. Press <ESCAPE> to return to the main menu.

8. If you are testing a 300 baud modem, skip this step and go on to step 9. Type "C" to enter the **Change Configuration** menu. Use the arrow key (//e) or <SPACE> (II+) to select 1200 baud. Repeat steps 3 and 4.

9. Return the baud setting to 300 baud.

10. If the self-test passes skip over this step and perform the **MODEM VERIFICATION TEST** on the next page. If the self-test fails, check your installation using the checklist below:

    - Verify the setting of the switches on the back of your modem.
    - Is the modem data cable securely connected to the computer and to the modem?
    - Is the modem power module connected to the modem? **NOTE:** Inspect the modem power module connector for bent or missing pins?
    - Is the modem power module plugged into an electrical outlet?
    - Is the modem turned on?
    - Verify the setting of the DIP switches on the Super Serial Card (Apple II+ or //e only).
    - Verify that the jumper block on the Super Serial Card has its triangle pointing to the word MODEM (Apple II+ or //e only).

If no problems are found during the installation check, replace the following modules (in the order listed) one at a time and rerun the self-test:

- power module
- modem data cable
- modem PCB

After isolating and repairing the problem, continue on to the **MODEM VERIFICATION TEST** on the next page.

B. Modem Verification Test

This test will verify the correct operation of the modem and the telephone lines.

Equipment Required:

Apple II+, //e, or /// system with drive and monitor
Super Serial Card (if Apple II+ or //e is used)
Apple Term program diskette
Local telephone line and a user service

NOTE: The user service may be a local bulletin board or any data service as long as the baud rate and protocol are known and can be verified. Do not attempt to test a modem by dialing an unverified user service. The results will be very confusing.

1. Obtain the telephone number of a compatible user service.

2. From the Apple Term main menu, type "U" to enter the phone directory menu.

3. Add the telephone number of the user service by holding down the <OPEN-APPLE> key and typing "A" (//e) or holding down the <CONTROL> key and typing "A" (II+). The cursor will appear at the first available line on the telephone list.

4. Type a name or label that lets you identify the number to be added. Press <RETURN> and the cursor will move to the number column.

5. Type the complete telephone number including any prefixes required to get an outside line. Do not use spaces or dashes to separate parts of the telephone number. Press <RETURN> when you are finished entering the telephone number.

6. Press <ESCAPE> to get out of the phone directory screen and return to the main menu.

7. Type "E" to enter the terminal mode.

8. Hold down the <OPEN-APPLE> key and type "D" (//e) or hold down the <CONTROL> key and type "D" (II+) - this will automatically dial the number you entered.

NOTE: If the **CONNECT** message appears on your monitor screen and a message from the user service you dialed appears, your modem is working properly. If a **NO CARRIER** message appears on your screen, your modem was unable to connect you with the number selected and you should replace the following components (one at a time) in the order listed:

- telephone cable
- modem power module
- modem PCB
- modem data cable

After isolating and repairing the problem, verify correct operation by running the **MODEM VERIFICATION TEST** again.

C. Back-to-Back Test

This is an optional test that requires two complete computer systems and two identical modems. Perform this test only when a customers modem does not function correctly, but no problem can be found by running the **SELF-TEST** or **MODEM VERIFICATION TEST.**

Equipment Required:

(2) Apple II+, //e, or /// systems with drives and monitors
(2) Super Serial Card (one for each computer if Apple II+ or //e is used
(2) Apple Term program diskettes
(2) identical modems (one modem must be a known good unit)
(2) local telephone lines (two separate phone lines must be used)

If the modem fails any steps of this procedure, replace the modem power module and repeat the test. If that does not cure the problem, replace the modem PCB and repeat the test. If the modem passes all steps of this procedure, the **SELF-TEST**, and the **MODEM VERIFICATION TEST**, but the customer still cannot get the modem to work at their site, have the customer contact the telephone company to investigate their telephone line.

1. With both modems installed according to the User's Manual instructions, turn the computers and modems on and boot the Apple Term software on both systems.

2. On the system with the suspected bad modem, type "U" to enter the phone directory menu.

3. Add the telephone number of the known good modem to the phone directory by holding down the <OPEN-APPLE> key and typing "A" (//e) or holding down the <CONTROL> key and typing "A" (II+). The cursor will appear at the first available line on the telephone list.

4. Press <RETURN> and the cursor will move to the number column.

5. Type the telephone number of the known good modem. Do not use spaces or dashes to separate parts of the telephone number. Press <RETURN> when you are finished entering the telephone number.

6. Press <ESCAPE> to get out of the phone directory screen and return to the main menu.

7. Type "E" on both computers to enter the terminal mode.

8. On the system with the suspected bad modem, hold down the <OPEN-APPLE> key and type "D" (//e) or hold down the <CONTROL> key and type "D" (II+) - this will automatically dial the number you entered (the known good modem). The **CONNECT** message should appear on your monitor screen; if it does, go to step 9. If a **NO CARRIER** message appears on your screen, check the setup of both modems and computers, then dial again. If a **NO CARRIER** message appears again, turn both modems and computers off, replace the PCB in the suspected bad modem, and start the test again from step 1. If the test passes, the modem PCB was faulty.

9. On the system with the suspected bad modem, type a short message and verify that it is displayed on the screen of the system with the known good modem.

10. On the system with the known good modem, type a short message and verify that it is displayed on the screen of the other system (the suspected bad modem).

11. On the system with the suspected bad modem, hold down the <OPEN-APPLE> key and type "H" (//e) or hold down the <ESCAPE> key and type "H" (II+) to hang up the modem. The screen should now have the message **NO CARRIER.**

12. On the system with the known good modem, hold down the <OPEN-APPLE> key and type "Q" (//e) or hold down the <ESCAPE> key and type "Q" (II+) to return to the main menu.

13. Type "U" to enter the phone directory menu.

14. Add the telephone number of the suspected bad modem to the phone directory by holding down the <OPEN-APPLE> key and typing "A" (//e) or holding down the <CONTROL> key and typing "A" (II+). The cursor will appear at the first available line on the telephone list.

15. Press <RETURN> and the cursor will move to the number column.

16. Type the telephone number of the suspected bad modem. Do not use spaces or dashes to separate parts of the telephone number. Press <RETURN> when you are finished entering the telephone number.

17. Press <ESCAPE> to get out of the phone directory screen and return to the main menu.

18. Type "E" to enter the terminal mode.

19. Hold down the <OPEN-APPLE> key and type "D" (//e) or hold down the <CONTROL> key and type "D" (II+) - this will automatically dial the number you entered (the suspected bad modem). The **CONNECT** message should appear on your monitor screen; if it does, go to step 20. If a **NO CARRIER** message appears on your screen, check the setup of both modems and computers, then dial again. If a **NO CARRIER** message appears again, turn both modems and computers off, replace the PCB in the suspected bad modem, and start the test again from step 1. If the test passes, the modem PCB was faulty.

20. Hold down the <OPEN-APPLE> key and type "H" (//e) or hold down the <ESCAPE> key and type "H" (II+) to hang up the modem. The screen should now have the message **NO CARRIER.**

21. Hold down the <OPEN-APPLE> key and type "Q" (//e) or hold down the <ESCAPE> key and type "Q" (II+) to return to the main menu.

22. Type "C" to enter the **Change Configuration** menu. Use the arrow keys to select touch-tone dialing.

23. Press <ESCAPE> to return to the main menu.

24. Type "E" to enter the terminal mode.

25. Hold down the <OPEN-APPLE> key and type "D" (//e) or hold down the <CONTROL> key and type "D" (II+) - this will automatically dial the number you entered.

26. When the **CONNECT** message appears, type a short message and verify that it is displayed on the screen of the suspected bad modem. If the **CONNECT** message did not appear,or if the message you typed was not displayed on the suspected bad modem, replace the PCB in the suspected bad modem and run this test again.

TAKE-APART

PCB Removal

1. Carefully pry off the two rubber feet from the bottom front of the modem.

2. Remove the four screws holding the two case halves together.

3. Remove the bottom cover and set it aside.

4. Lift out the modem PCB.

5. Remove the service spare modem from the shipping box. Notice that the top and bottom covers are labeled "service use only". These covers must be returned with the faulty board for service credit.

6. Remove the service replacement board in the same way as you did the customers board. Replace the bad board with the service spare, after first confirming that the two are the same model.

7. Place the bad board on the service covers and fill out the service repair order information. Ship the bad board and/or modem power module to the Apple Service Center for credit.

apple computer

300/1200 Modems Technical Procedures

Section 2

Illustrated Parts List

Modem Part Numbers..... 2.3
Cables and Connectors..... 2.5

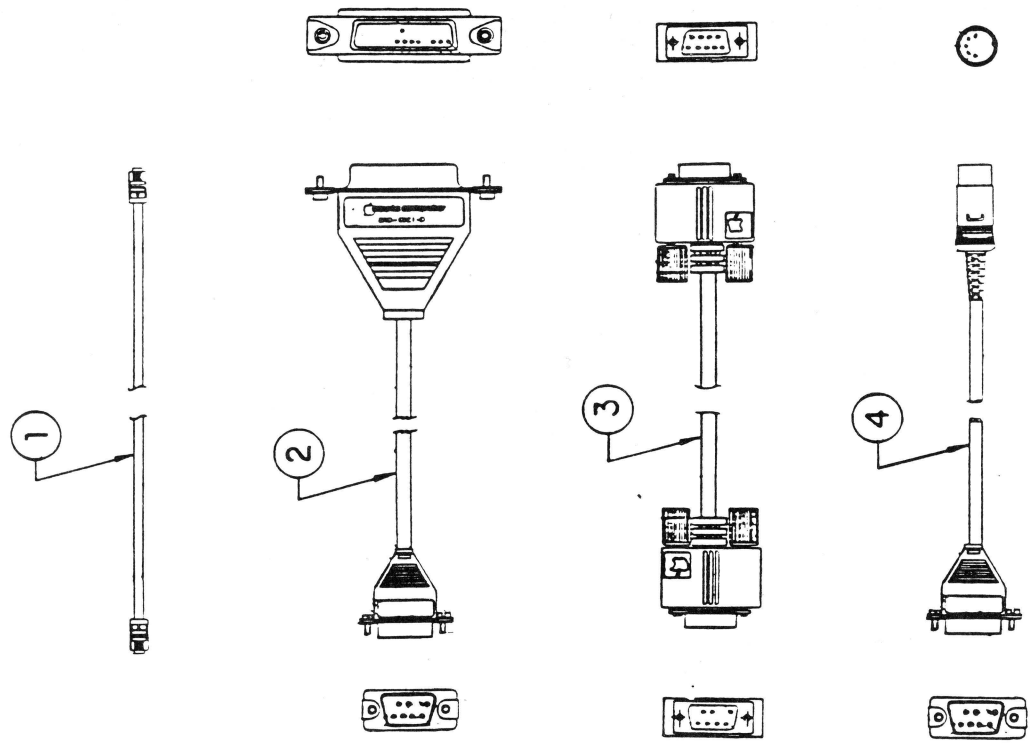

FIGURE 2

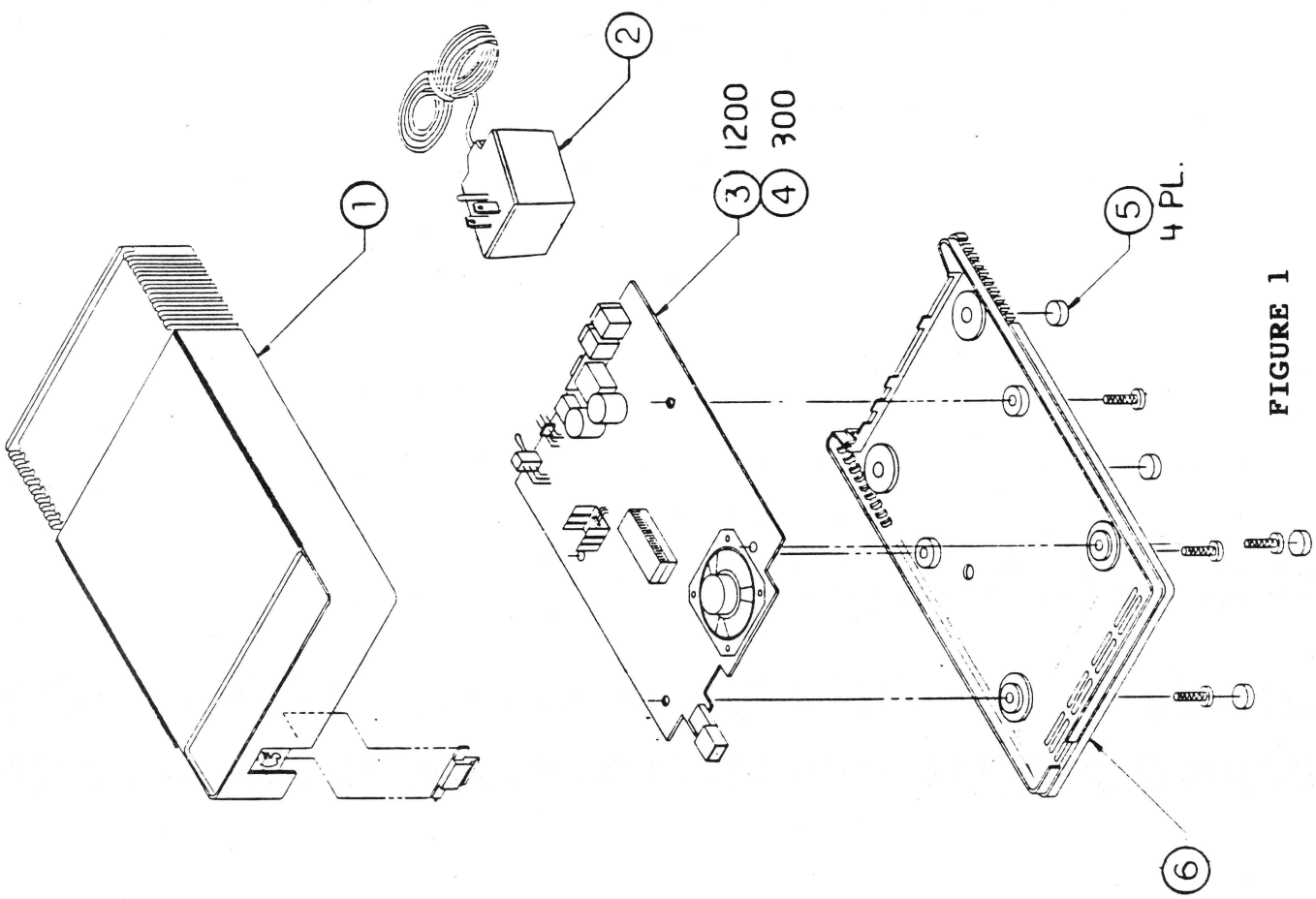

FIGURE 1

apple computer

The figures and lists below include all piece parts that can be purchased separately from Apple for the Apple 300/1200 Modem, along with their part numbers. Refer to your Apple Service Programs binder or contact your local Apple Level Two Service Center for prices.

MODEM (Figure 1)

Item	P/N	Description
1	815-0790	Top Cover
2	076-8077	Transformer, Cable Assembly
3	661-75164	PCB, Modem 1200
4	661-75165	PCB, Modem 300
5	865-0003	Rubber Foot
6	815-0791	Bottom Cover

CABLES AND CONNECTORS (Figure 2)

Item	P/N	Description
1	076-8075	Cable Assembly, RJ-11
2	590-0121	Cable Assembly, Interface (][, ///, Lisa)
3	590-0197	Cable Assembly, Interface (Macintosh)
4	590-0192	Cable Assembly, Interface (Apple //c)

INTRODUCTION

Most of the problems with modems will occur during the installation procedures. Other problems may occur only with certain baud rates or modes of operation.

NOTE: The Apple Personal Modem has no DIP switches to set. The baud rate, parity, and duplex settings for the modem are **software controlled.** The three baud rates available are 110, 300, or 1200. Verify all configuration settings on the application being used.

The Apple Personal Modem is composed of two pieces: the power connector (Figure 1, #1) and the body (Figure 1, #2). **If the body is defective, BOTH pieces must be returned to Apple. If the power connector is defective, this piece can be obtained separately.**

For more information, refer to the Apple Personal Modem User's Manual.

EQUIPMENT REQUIRED

The following equipment will be needed for all procedures:

Apple Personal Modem
Apple Personal Modem User's Manual
Phone line
Appropriate cables for connection to computer

ONE of the following combinations:

Computer	Software
Apple II Family	Access II or AppleTerm
Macintosh	MacTerminal
Macintosh XL	MacTerminal or LisaTerminal

POWER TEST

The modem will beep when it is initially plugged into a wall socket. The beep signals that the modem's circuitry is operating properly and that the modem is receiving power.

If the modem doesn't beep when it is plugged in, check the following:

1. Turn the volume control clockwise (see Figure 2) and try plugging in the modem again.

2. Verify that the power connector is firmly in place. Push it all the way in until it clicks into position. Try plugging in the modem again.

3. Exchange the whole unit. Try plugging in the new modem.

4. Continue to **Computer Test.**

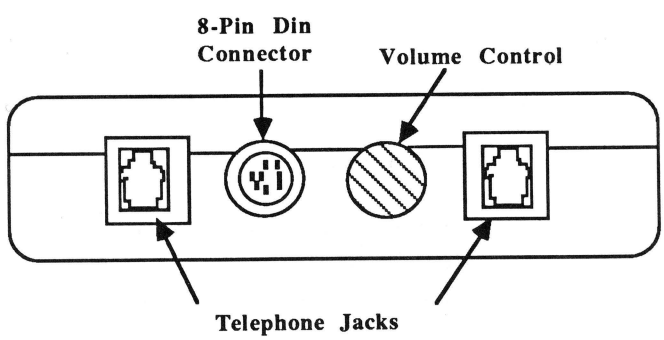

FIGURE 2

Modems Technical Procedures

Section 4

Apple Personal Modem: Illustrated Parts List

The figures and lists below include all piece parts that can be purchased separately from Apple for the Apple Personal Modem, along with their part numbers. These are the only parts available from Apple. Refer to your Apple Service Programs manual for prices.

Contents:

Apple Personal Modem and Modem Cables.....4.3

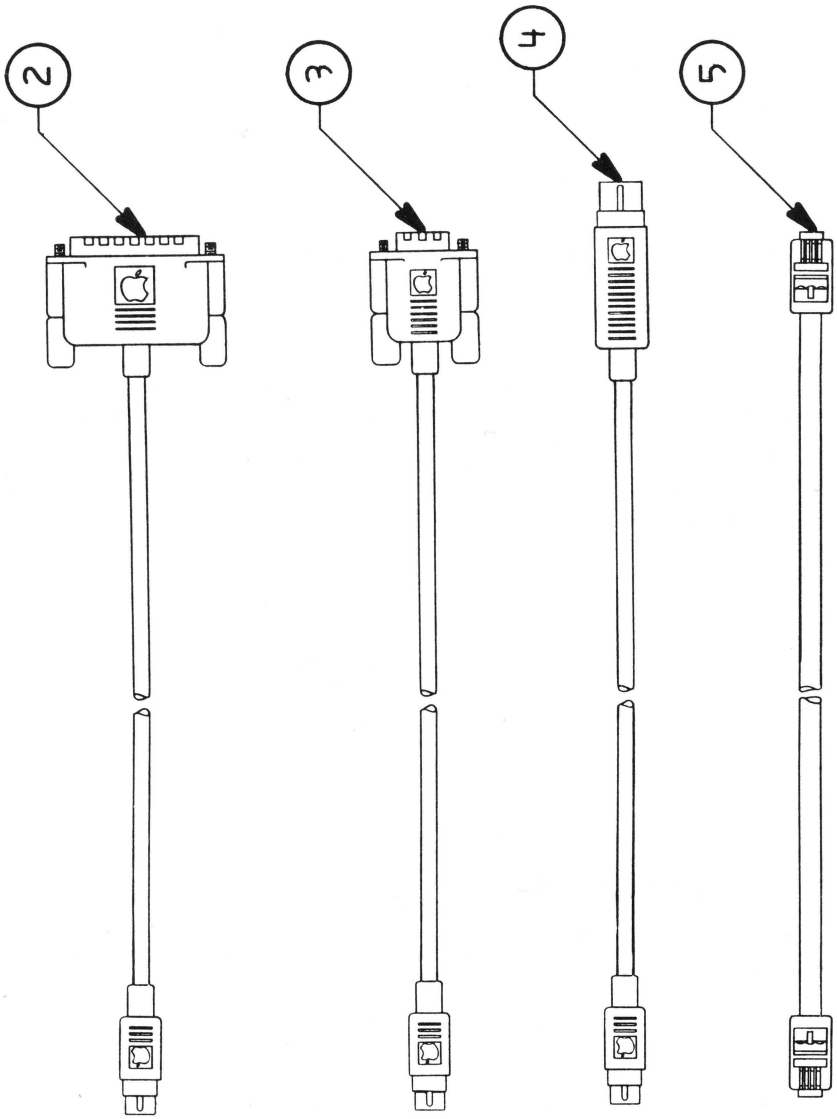
2
3
4
5

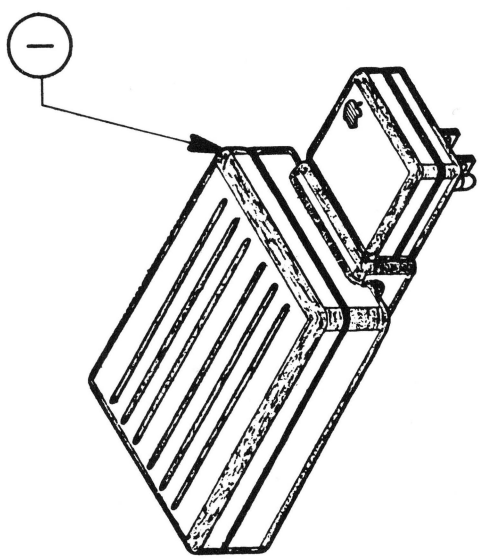
1

APPLE PERSONAL MODEM AND MODEM CABLES

Item	Part No.	Description
1	661-0313	Main Body, Apple Personal Modem (includes Power Connector)*
	933-0001	Plug Head, Power Connector (only)*
2	590-0331	Cable, APM to Apple II, II+, IIe, Apple ///, Macintosh XL
3	590-0332	Cable, APM/ImageWriter II to Macintosh
4	590-0333	Cable, APM/ImageWriter II to Apple IIc
5	076-8075	Cable Assy, RJ-11

***NOTE:** The whole unit module includes the power connector. If desired, the power connector can be ordered separately.

TECHNICAL PROCEDURES MANUAL

August, 1986 Edition

TABLE OF CONTENTS - VOLUME FOUR

Monitor II	
--Table of Contents	4/86
--General	10/84
(except pages 1.7, 1.8, 1.9)	5/86
--Take-Apart	4/86
--Adjustments	4/86
--Troubleshooting	5/84
(except pages 4.1)	6/85
(except pages 4.3-4.5)	4/86
--Illustrated Parts List	4/85
(except pages 5.1, 5.2)	8/85
AppleColor Monitor 100	
--Table of Contents	3/85
(except page 0.2)	8/84
--General	8/84
(except page 1.2)	2/85
(except page 1.7)	5/86
--Take-Apart	8/84
(except pages 2.1, 2.35)	3/85
(except page 2.5)	5/86
(except pages 2.6-2.12)	12/85
(except pages 2.26-2.29,2.34)	2/85
--Adjustments	8/84
(except page 3.9)	2/85
--Troubleshooting	8/84
(except page 4.2)	2/85
--Illustrated Parts List	11/85
(except pages 5.2, 5.3, 5.4, 5.5)	7/86
Apple IIc Flat Panel Display	
--Table of Contents	4/85
--Troubleshooting	1/85
--Diagnostics	1/85
--Take-Apart	1/85
(except page 3.15)	10/85
--Illustrated Parts List	10/85
(except page 4.3)	7/86
Apple Monitor IIc	
--Table of Contents	4/85
--Serial Number Transfer	3/85
(except page 1.1)	2/86
--Illustrated Parts List	4/85

Apple ColorMonitor IIe/IIc

--Table of Contents	8/86
--Service Notes	2/86
(except page 0.5)	3/86
--Basics	10/85
(except page 1.3)	8/86
(except page 1.5)	5/86
--Trouble Shooting	12/85
(except page 2.3)	8/86
(except page 2.5)	2/86
--Take-Apart: Series "S"	10/85
(except page 3S.1)	11/85
(except page 3S.7)	5/86
(except pages 3S.10, 3S.12, 3S.13)	7/86
(except pages 3S.31, 3S.33)	12/85
--Take-Apart: Series "H"	11/85
(except pages 3H.1, 3H.8, 3H.11-3H.19, 3H.27, 3H.35-3H.42)	8/86
(except page 3H.7)	5/86
(except page 3H.29)	2/86
(except pages 3H31, 3H.33)	12/85
--Adjustments	12/85
(except pages 4.1, 4.7, 4.11, 4.13)	8/86
--Illustrated Parts List	12/85
(except pages 5.4, 5.5, 5.9)	4/86

apple computer

MONITOR // TECHNICAL PROCEDURES

SECTION 1

GENERAL

Contents:

General information.....1.3
Set Up procedure.....1.5

apple computer

GENERAL INFORMATION

The Monitor // is a 12" CRT display monitor, to be used with the Apple //e or Apple][computer. The screen tilts up or down to help reduce screen glare, and there is a built-in handle for easy carrying. The power switch is on the upper right corner of the unit and will stay depressed when the unit is on. Behind the power button is a green LED that lights up when the power is on.

The only adjustment on the front of the unit is the contrast control, which is along the right edge of the unit. The other external controls are on the back side of the unit. They include a **brightness** control, a **vertical hold control** and a **vertical size control** which lengthens or shortens the vertical height of the picture.

Internal to the unit are a **horizontal width control**, a **horizontal linearity control**, which assures the characters are of uniform width on both sides of the screen, and **horizontal hold control** to control horizontal rolling or tearing on the screen. There also is a **vertical linearity control** to assure that the top and bottom characters are the same size, and a **focus control**, used to maintain the best overall image on the screen. The internal controls are mainly used for servicing adjustments, which are discussed later in this procedure.

The adjustment section is written to be use with either the Monitor test pattern diskette (part # 686-0026) or the Apple //e ROM diagnostic card (part #661-94086) to generate test patterns.

apple computer

SET UP PROCEDURES

To set up the Monitor // for use with the Apple //e or Apple][, do the following:

1. Connect one end of the video cable phono plug to the phono jack on the back of the Monitor. Connect the other end to the Apple video output phono jack. (It doesn't matter what end of the cable you use, both are the same.)

2. Plug the power cable into a three-hole grounded wall socket.

3. Switch on the Monitor and write some text on the computer.

4. Turn the contrast control clockwise to its maximum. (The contrast control is located along the right front edge of the Monitor.)

5. Turn the brightness control on the rear of the monitor clockwise (facing the rear of the Monitor) until the fine lines that form the background of the display are clearly visible.

6. Turn the brightness control counter-clockwise until the fine lines of the background are just extinguished.

7. Adjust the contrast control to give a pleasing level of text illumination.

8. Adjust the tilting screen so that it is perpendicular to your line of vision.

SAFETY PRECAUTIONS

1. **EXCEPT WHEN MAKING "LIVE" ADJUSTMENTS, ALWAYS REMOVE THE AC POWER CORD BEFORE WORKING INSIDE THE MONITOR II.**

2. **ALWAYS DISCHARGE THE CRT BEFORE REMOVING OR REPLACING ANY INTERNAL PARTS.** The CRT, or Cathode-Ray Tube, (Figure 1, #1) is an extremely dangerous piece of equipment. It runs at 12,000 volts DC and contains a high vacuum. Before touching any internal components you must discharge the CRT. (See **Discharging the CRT.**)

3. **ALWAYS WEAR SAFETY GOGGLES WHEN WORKING WITH A CRT.** Aside from electric shock, the most serious danger in working with CRTs is that you may break the tube and cause it to implode. Since the tube contains a high vacuum, a break can cause the tube to collapse into itself violently, then explode. This will not always happen when the tube is broken, but it is always possible, and you must be prepared for the worst case.

4. **NEVER SUBJECT THE TUBE TO MORE THAN MODERATE PRESSURE, AND NEVER HANDLE A TUBE BY ITS NECK.** To prevent an implosion, you should take every precaution against breaking the tube, especially at the neck, where the tube is the thinnest.

5. **ALWAYS REMOVE ALL RINGS, WRISTWATCHES, BRACELETS, ETC., BEFORE WORKING INSIDE THE MONITOR.** Metal jewelry is an excellent conductor of electricity. Removing jewelry will reduce the possibility of electric shock.

6. **NEVER TOUCH THE ANODE.** Normally the anode has a connector (Figure 1, #2) plugged into it, but when a CRT is replaced, this connector is removed, exposing the anode. The anode can maintain a charge of several thousand volts (even after the power is off).

7. **KEEP ONE HAND IN YOUR POCKET OR BEHIND YOUR BACK WHEN ADJUSTING OR DISCHARGING A LIVE CRT.** This reduces the risk of lethal injury should you accidentally contact high voltage.

8. **NEVER USE A GROUNDING WRISTSTRAP WHILE DISCHARGING A MONITOR OR WHILE MAKING ADJUSTMENTS ON A LIVE MONITOR.** A grounding wriststrap is used to protect sensitive components from the damaging effects of electrostatic discharge from your body or clothing. Because a wriststrap is designed to carry a charge, however small, it may safely be used ONLY when working on "dead" (uncharged) equipment.

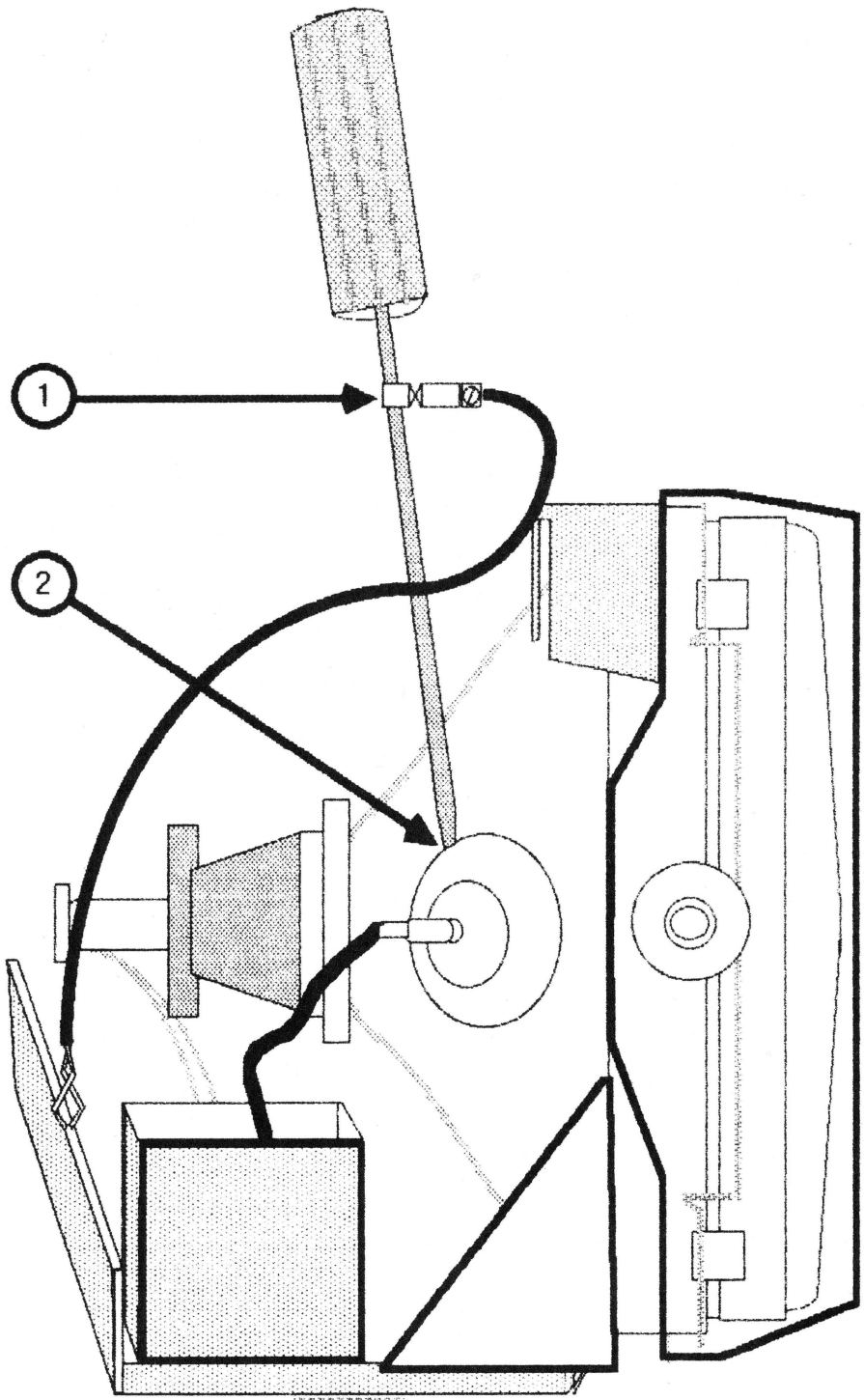

FIGURE 2

DISCHARGING THE CRT

1. Turn off the monitor.

2. Disconnect the AC power cord.

3. Remove the back cover as described in the Take-Apart section.

4. Position the monitor so that the back is facing you.

5. Remove any rings, wristwatches, bracelets, or grounding wriststraps.

6. Put on safety goggles.

7. Attach one end of an alligator lead to a long flatblade screwdriver, two inches from the insulated handle. Attach the other end to any part of the metal chassis surrounding the CRT. (Figure 2, #1).

   WARNING: USE ONLY ONE HAND WHILE DISCHARGING THE CRT. Grasp only the insulated handle of the screwdriver while discharging the CRT.

8. Slide the screwdriver under the CRT anode cap (Figure 2, #2) and push it towards the center of the cap until the blade comes into contact with the metal anode ring.

   CAUTION: DO NOT USE FORCE. If it is difficult to get the screwdriver under the anode cap, use a smaller screwdriver to loosen the suction of the anode cap on the tube. Then proceed to discharge the anode with the larger screwdriver.

9. Remove the screwdriver.

10. Remove the alligator clips.

11. Peel back the anode cap until you can see the anode ring at the center. Look at the metal connector in the center of the cap and notice how it is clipped into the CRT. Push on the cap in one direction and lift the cap off the tube.

NOTE: A secondary charge can build up even after you have discharged the CRT. To ensure that any residual charge is dissipated during the service procedure, establish a ground lead by fastening one alligator clip to the metal chassis and the other clip to the edge of the anode aperture.

DISPOSING OF THE CATHODE-RAY TUBE (CRT)

Since the CRT contains a high vacuum, a break can cause the tube to collapse into itself violently, and then explode. So, before you dispose of a defunct CRT, it must be devacuumed. The procedures for devacuuming the Monitor II CRT are as follows:

1. Locate a thick cardboard box large enough to completely conceal the CRT.

2. Cut or drill a hole in the side of the box, just large enough to insert the very tip of the CRT neck through. The hole should be about six inches from the bottom.

3. **Put on a pair of safety goggles.**

4. Carefully place the CRT inside the box with the tip of the neck protruding through the hole and tape the box flaps down with a strong tape, preferably duct tape. (See diagram below.)

   WARNING: ONLY THE VERY TIP OF THE CRT NECK SHOULD BE PROTRUDING THROUGH THE HOLE IN THE BOX. THE BOX MUST NOT HAVE ANY OTHER OPENINGS!

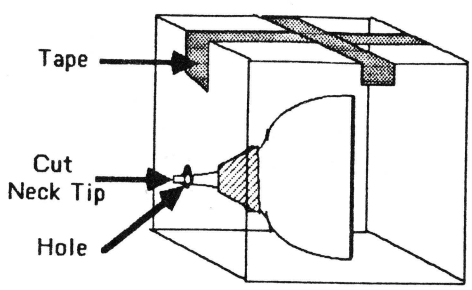

5. Standing to one side, use a pair of diagonal cutters to snip off the very tip of the CRT neck protruding through the hole.

   WARNING: DO NOT LOOK DIRECTLY AT THE BOX WHEN SNIPPING OFF THE NECK TIP!

   You will hear a prolonged sound of air entering the tube (psssssssss...). The CRT is now devacuumed.

apple computer

MONITOR // TECHNICAL PROCEDURES

SECTION 2

TAKE-APART

Contents:

Introduction.....2.3
Back case removal.....2.5
Filter board and Fuse removal.....2.7
Main PCB removal.....2.11
CRT removal.....2.17
Power switch removal.....2.21
Power transformer removal.....2.23

apple computer

INTRODUCTION

This section covers the take-apart procedures for the Monitor //. Below is a list of materials used for the procedures.

Monitor //
Medium Phillips screwdriver
Diagonal cutters
Phillips screwdriver (magnetic)
12 in. jumper wire (with insulated alligator clips)
Small flatblade screwdriver
Medium long nose pliers

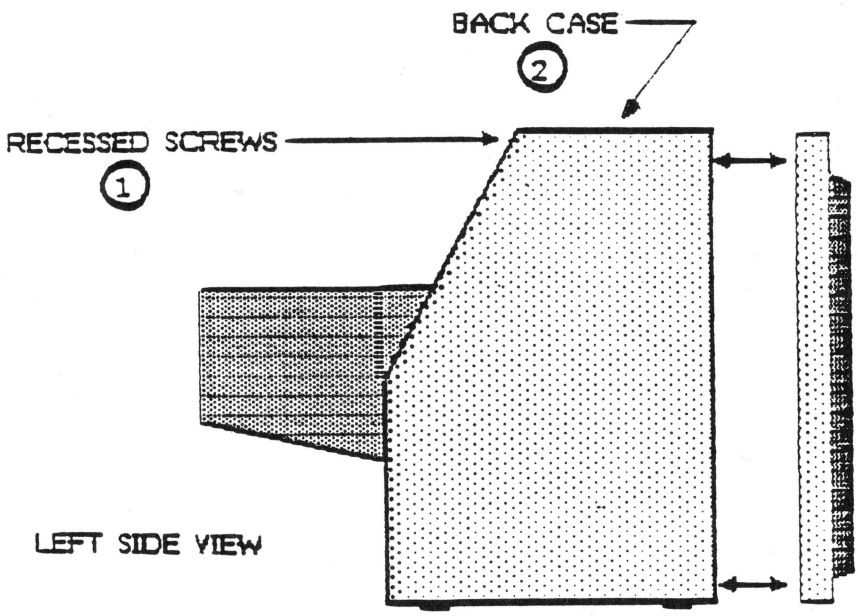

Figure 1

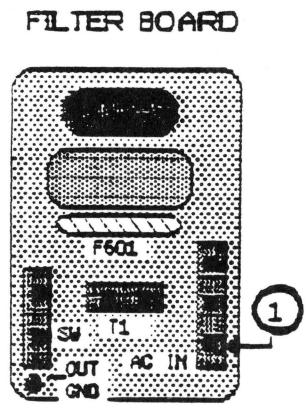

Figure 2

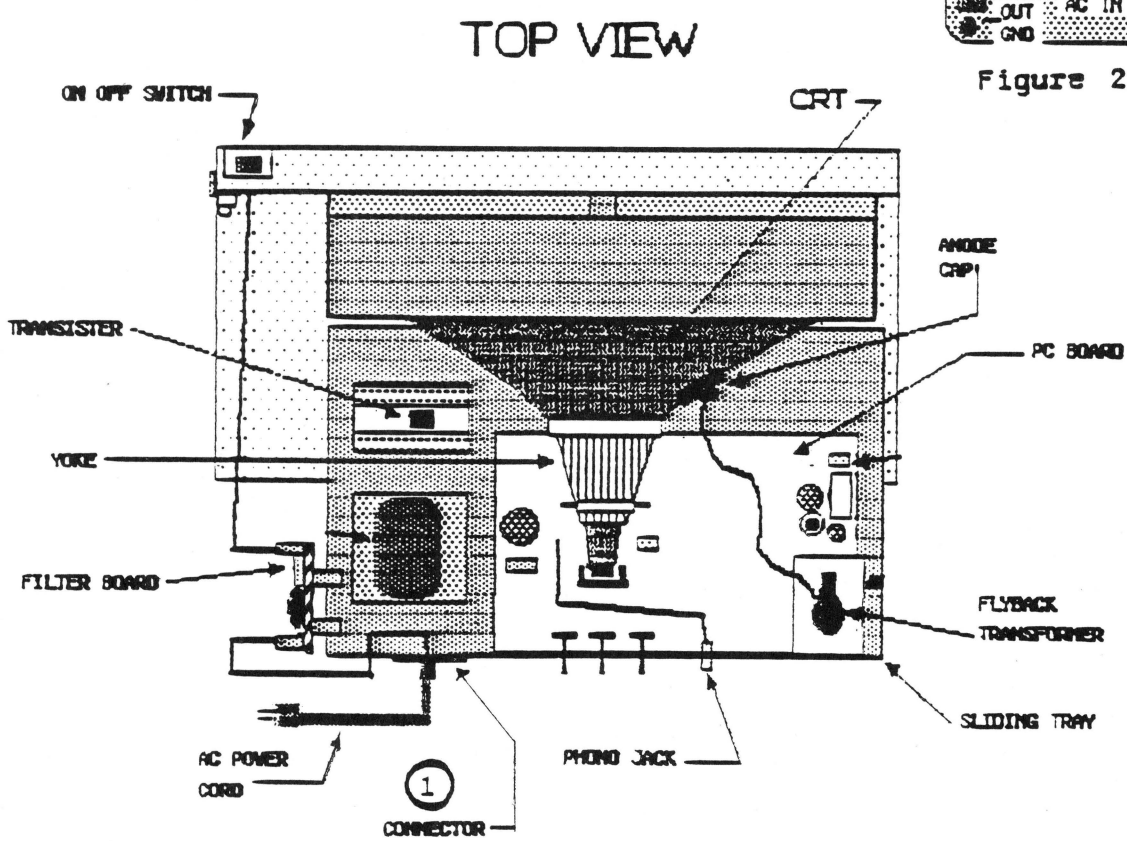

Figure 3

apple computer

BACK CASE REMOVAL

1. Place the Monitor on its left side (while facing the front) and remove the (4) four phillips head screws from the bottom.

2. Set the Monitor back on its feet, facing away from you and remove the (2) two screws, located in the top back side of the case, in the handle recess (see Figure 1.1).

3. Slide the back case to the rear and away from the Monitor (see Figure 1.2). Pull the power cord through the opening in the back case.

NOTE: On some early production Monitors the molded plug on the power cord is too large to fit through the opening in the back case. If this is the case, proceed with step 4; otherwise skip to step 5.

4. The power cord can be removed by disconnecting the plug at AC IN on the small filter pcb (see Figure 2.1) and desoldering the green ground wire. Remove the (2) two screws from the plastic cord mounting plate at the rear of the chassis (see Figure 3.1), remove the tie wrap, and withdraw the wires through the hole in the chassis.

5. To reinstall the back case and power cord, follow the procedure described above in reverse order.

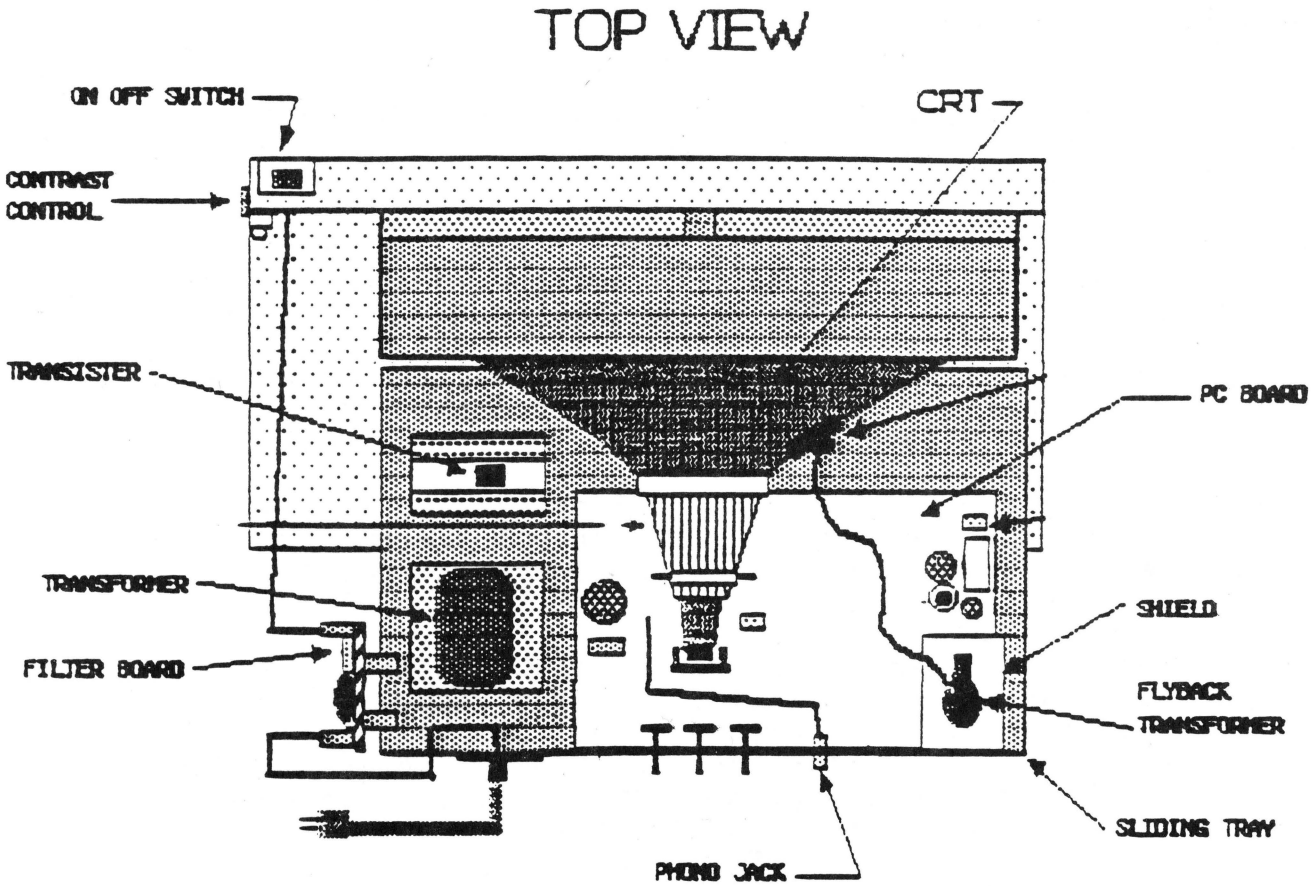

Figure 3

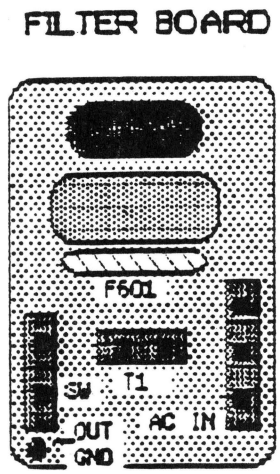

Figure 2

apple computer

FILTER BOARD AND FUSE REMOVAL

The filter board is located along the left rear side (facing the back of the unit) of the chassis (see Figure 3). To check the fuse or remove the filter board do the following:

Before starting, make sure the power cord is unplugged.

1. Remove the back case (see Back Case removal procedure).

2. Remove the three plugs from the filter board, AC IN, T1 and SW (see Figure 2).

3. Remove the phillips head bolt that holds the board to the chassis. (Hold the nut on the back side of the bolt with the long nose pliers.)

4. If you are changing the filter board then you will have to unsolder the ground wire to release the board completely. If you are only changing the fuse then the ground wire does not have to be removed.

5. If the fuse is open (the wire inside is broken) then change it by unsoldering both ends of the fuse wires from the board and lift the fuse from the board (this type of fuse is called a pig tail fuse).

   NOTE: It is easeier to unsolder if you use a solder sucker to remove the excess solder and some kind of holder (vice grips) to hold the board while your working on it.

6. Replacement of the fuse is just a matter of putting the correct fuse (for a 115V unit, use a .5amp fuse, for a 230V unit, use a .5amp slow blow fuse) into the wire holes and resoldering the leads. Clip off any excess from the leads after soldering.

   NOTE: Newer models of the Monitor II will have clip in fuse holders and will not require unsoldering or removal of the filter board to change the fuse.

7. To replace the filter board with a new one do the following:

   a) Solder the green ground wire to the filter board where it is marked 'Ground Out.

Continued on next page

FILTER BOARD

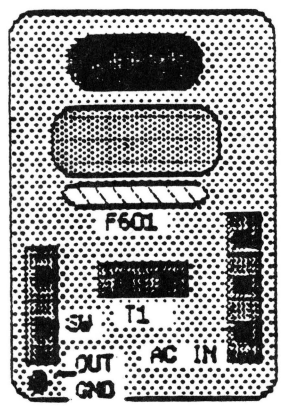

Figure 2

b) Remount the filter board to the chassis bracket using the phillips bolt.

c) Plug in the three plugs SW, T1, and AC IN. Be careful with SW and T1 -- both are two prong plugs and can be put on the wrong posts. T1 comes from the transformer and SW comes from the Power Switch.

IMPORTANT: T1 can also be put on backwards: the black lead should go on the left and the white lead should go on the right as you face the board. The board is marked B and W for this plug.

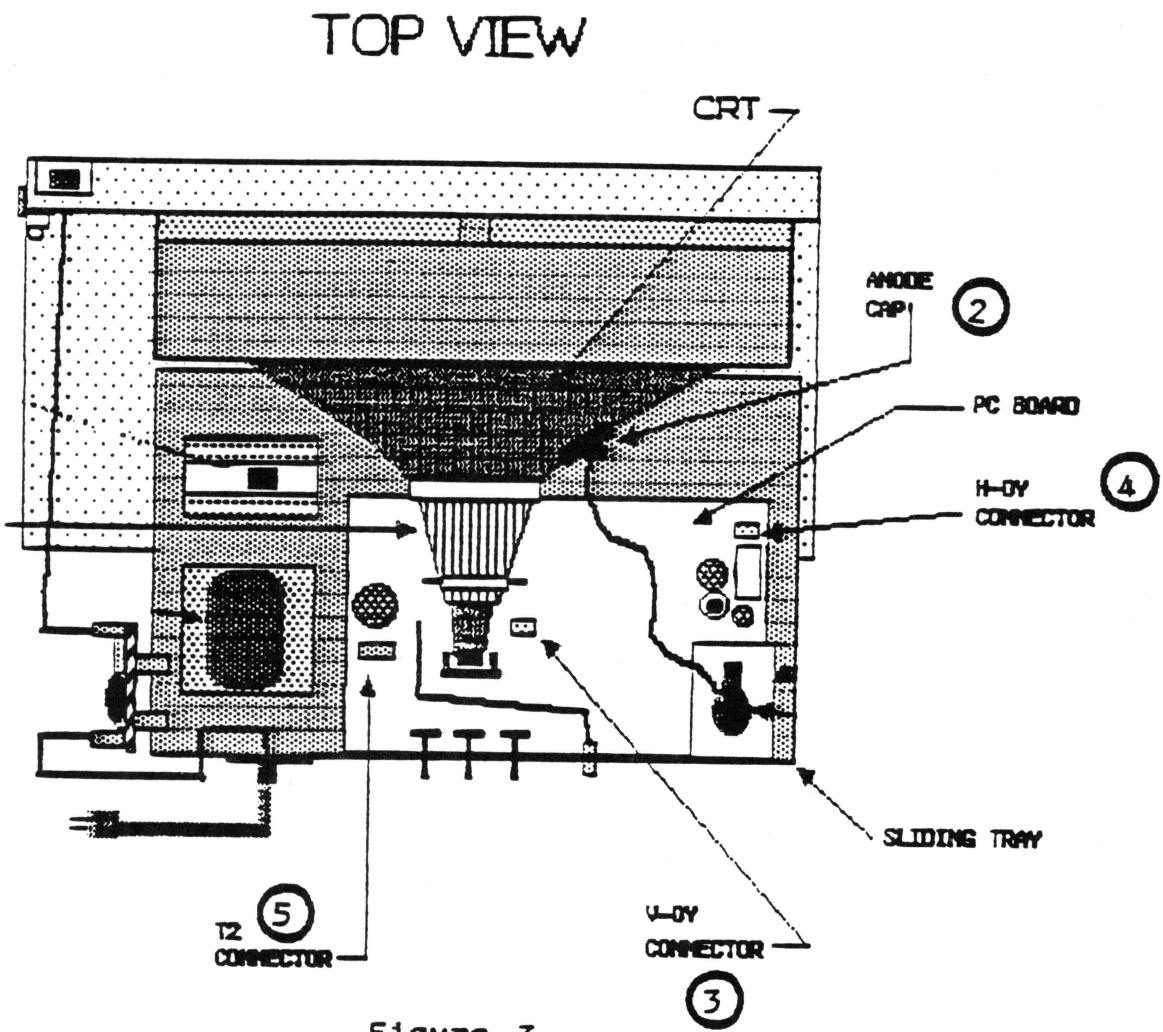
TOP VIEW
CRT
ANODE CAP
2
PC BOARD
H-DY CONNECTOR
4
SLIDING TRAY
T2 CONNECTOR
5
V-DY CONNECTOR
3

Figure 3

apple computer

PCB (Printed Circuit Board) REMOVAL

CAUTION

ALWAYS REMOVE POWER FROM THE MONITOR // AND DISCHARGE THE CRT ANODE BEFORE FOLLOWING THESE PROCEDURES. A STATIC CHARGE MAY STILL BE PRESENT ON THE HIGH VOLTAGE ANODE, EVEN AFTER POWER IS REMOVED. TO PROTECT YOURSELF FROM INJURY, ALWAYS DISCHARGE THE HIGH VOLTAGE ANODE BEFORE ATTEMPTING TO DISCONNECT IT FROM THE CRT.

1. Remove the back case (see Back Case Removal procedures).

2. DISCHARGE THE HIGH VOLTAGE ANODE. This is accomplished by connecting one clip of the jumper wire to the metal chassis and the other clip to the flatblade screwdriver. Then slide the screwdriver under the rubber cup (anode cap) on the side of the CRT until it contacts the metal clip (see Figure 3.2). The anode wire can now be removed by squeezing the clip on the end of the wire.

3. Remove the anode wire by peeling back the rubber cup, using long nose pliers to squeeze the metal clip together, and pulling it out.

NOTE: Before doing the following steps, pull the chassis tray toward the back of the unit. The components are more accessible with the chassis pulled back as far as the wires allow.

4. Disconnect the two (2) pairs of wires going from the yoke to the PCB. The green/white is connected at V-DY in the center of the board (see Figure 3.3), and the brown/gray at H-DY located on the front right corner of the board (see Figure 3.4). Cut all the tie wraps along these wires.

5. Remove the black ground wire going from the PCB to the mounting tab at the upper right corner of the CRT, by removing the screw in the tab.

6. Disconnect the transformer secondary wires (2 red) at location T2 near the left rear edge of the PCB (see Figure 3.5).

Continued on next page

FILTER BOARD

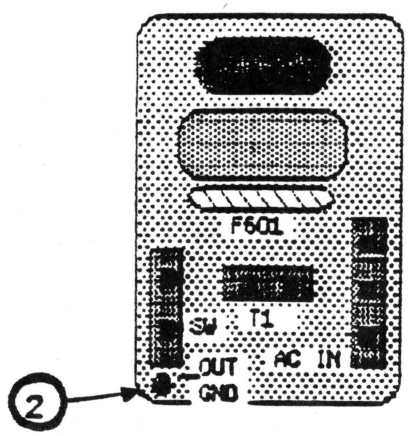

Figure 2

TOP VIEW

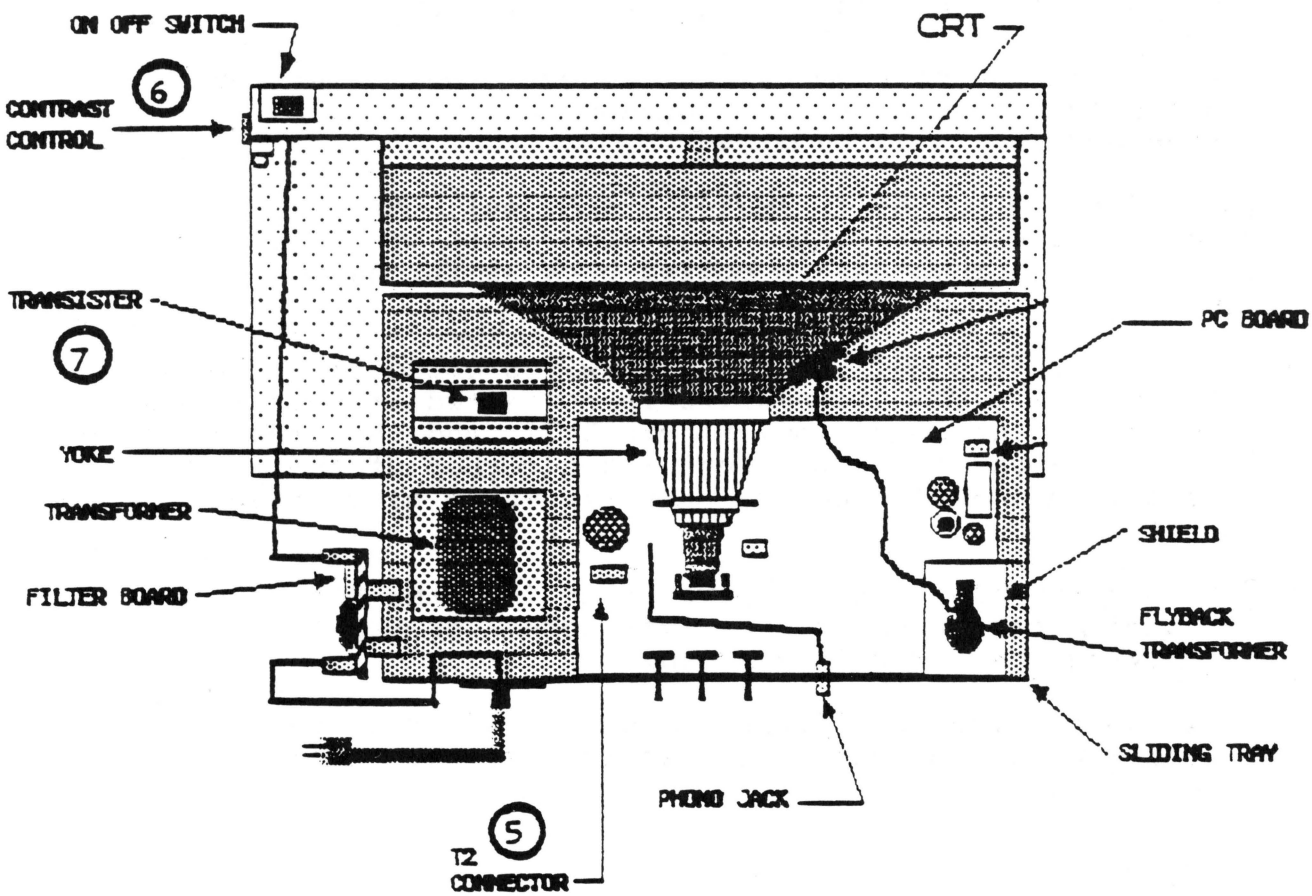

Figure 3

7. Unsolder the green ground wire from the small filter PCB at OUT/GND (see Figure 2.2).

NOTE: It might be easier if you remove the filter board from the chassis to get at the solder on the back side.

8. Remove the one LED mounting screw and the two (2) contrast control mounting screws located along the left front case (see Figure 3.6). These two parts will remain attached to the PCB. Cut all tie wraps along these wires.

10. Disconnect the three (3) wire connector from the transistor in front of the transformer (see Figure 3.7).

11. Disconnect the socket on the end of the CRT.

12. Remove the two screws that attach the RCA phono jack to the chassis.

13. Remove the five (5) mounting screws from the PCB (see Note). The PBC can now be removed by sliding it forward 1 inch (this will allow the knobs to clear the chassis) and lifting up.

NOTE: The mounting screw at the right rear of the PCB also holds the flyback transformer shield. After removing the screw, remove the shield.

INSTALLING THE PCB

1. Mount the PCB on the sliding chassis, making sure the three stems from the pots fit through the holes in the chassis. Secure the board with the five screws. Make sure that the shield is mounted around the flyback transformer with the mounting screw at the right rear of the PCB.

2. Replace the phono jack.

3. Replace the CRT socket.

4. Connect the 3-wire connector to the transistor.

5. Reconnect the LED and the Contrast Control on the front case.

Continued on next page

6. Solder the green ground wire from the PCB to the filter board. (If you had removed the filter board, remount it at this time and connect any wires that had been removed.)

7. Connect the 2 red leads from the transformer to connector T2 on the PCB.

8. Connect the black ground lead from the PCB to the upper right corner of the CRT mounting screw.

9. Connect the (2) pairs of wires from the yoke to the PCB. The green/white wire connects to the V-DY connector, and the brown/gray wire to the H-DY connector.

10. Reconnect the Anode cap to the anode of the CRT, making sure that both metal clips are in correctly.

NOTE: When a new PCB board is installed, it is possible that the horizontal or vertical circuits will need adjustment. See the PCB adjustment.

TOP VIEW

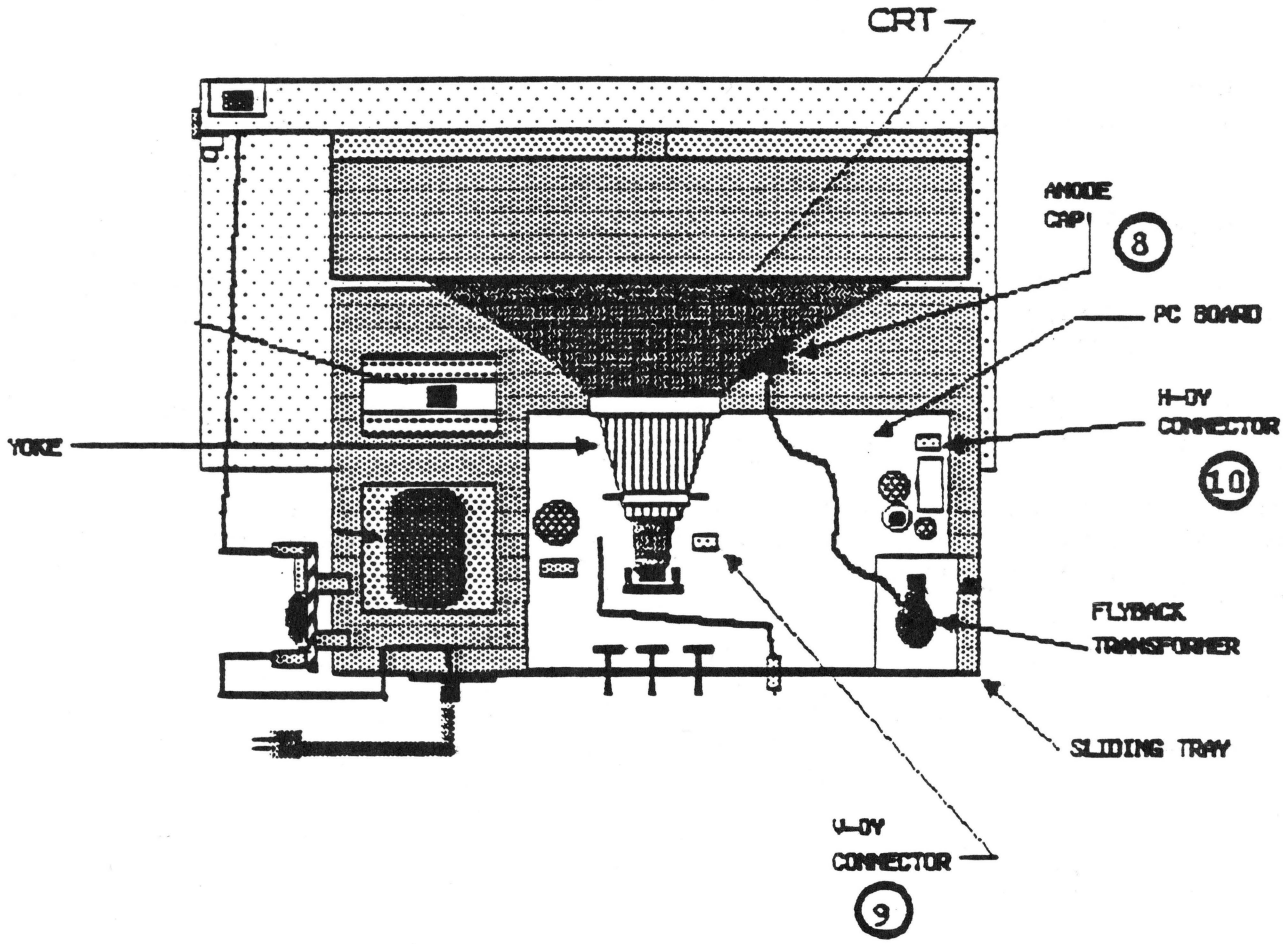

Figure 3

apple computer

CRT REMOVAL

CAUTION

ALWAYS REMOVE POWER FROM THE MONITOR // AND DISCHARGE THE CRT ANODE BEFORE FOLLOWING THESE PROCEDURES. A STATIC CHARGE MAY STILL BE PRESENT ON THE HIGH VOLTAGE ANODE, EVEN AFTER POWER IS REMOVED. TO PROTECT YOURSELF FROM INJURY, ALWAYS DISCHARGE THE HIGH VOLTAGE ANODE BEFORE ATTEMPTING TO DISCONNECT IT FROM THE CRT.

1. Remove the back case (see Back Case Removal procedures).

2. DISCHARGE THE HIGH VOLTAGE ANODE. This is accomplished by connecting one clip of the jumper wire to the metal chassis and the other clip to the flatblade screwdriver. Then slide the screwdriver under the rubber cup (anode cap) on the side of the CRT until it contacts the metal clip (see Figure 3.8). The anode wire can now be removed by squeezing the clip on the end of the wire.

3. Remove the anode wire by peeling back the rubber cup, using long nose pliers to squeeze the metal clip together, and pulling it out.

4. Disconnect the two (2) pairs of wires going from the yoke to the PCB. The green/white is connected at V-DY in the center of the board (see Figure 3.9), and the brown/gray at H-DY located on the front right corner of the board (see Figure 3.10). Cut all the tie wraps along these wires.

5. Disconnect the socket on the end of the CRT.

6. Remove the black ground wire on the left side that runs from the PCB to the left side of the top ground shield.

7. Remove the five screws that hold the top ground shield to the front case, and remove the top shield.

8. Remove the two bottom mounting screws on the CRT (one at each corner).

Continued on next page

9. Support the CRT with one hand and remove the top CRT mounting screws. On the top right side there is an antistatic shield finger plate that will also come off. (Avoid touching the anode opening).

10. When all four mounting screws have been removed, gently lift out the CRT. If the CRT is hard to get out, hold the back end of the tube with one hand and gently push on the front of the tube with the other hand.

11. The yoke assembly can be removed from the CRT by loosening the clamp screw and sliding the yoke off to the rear. It may be necessary to cut through the adhesive at the front of the yoke.

INSTALLING THE CRT

1. Insert the tube into the front frame, aligning the four mounting screws. Screw the top left hand mounting screw in first, and then the top right screw, making sure the antistatic shield finger plate is in place and touching the tube, and that the black ground wire from the right side of the PCB is also attached to the screw. Then put in the two bottom screws.

2. Reinstall the top ground shield that mounts to the front case with the 5 screws. Then attach the black ground wire coming from the left side of the PCB, to the left side of the top shield

3. Install the socket on the back of the CRT.

4. Connect the green/white wires from the yoke to the V-DY connector near the middle of the PCB, and the brown/gray to the connector near the front right corner of the PCB.

5. Reinstall the anode lead on the tube.

6. Tie wrap the wires that are in groups making sure that the chassis tray can slide all the way in and out without the wires binding.

NOTE: If the yoke had been removed or replaced an adjustment might be necessary. See the Yoke adjustment.

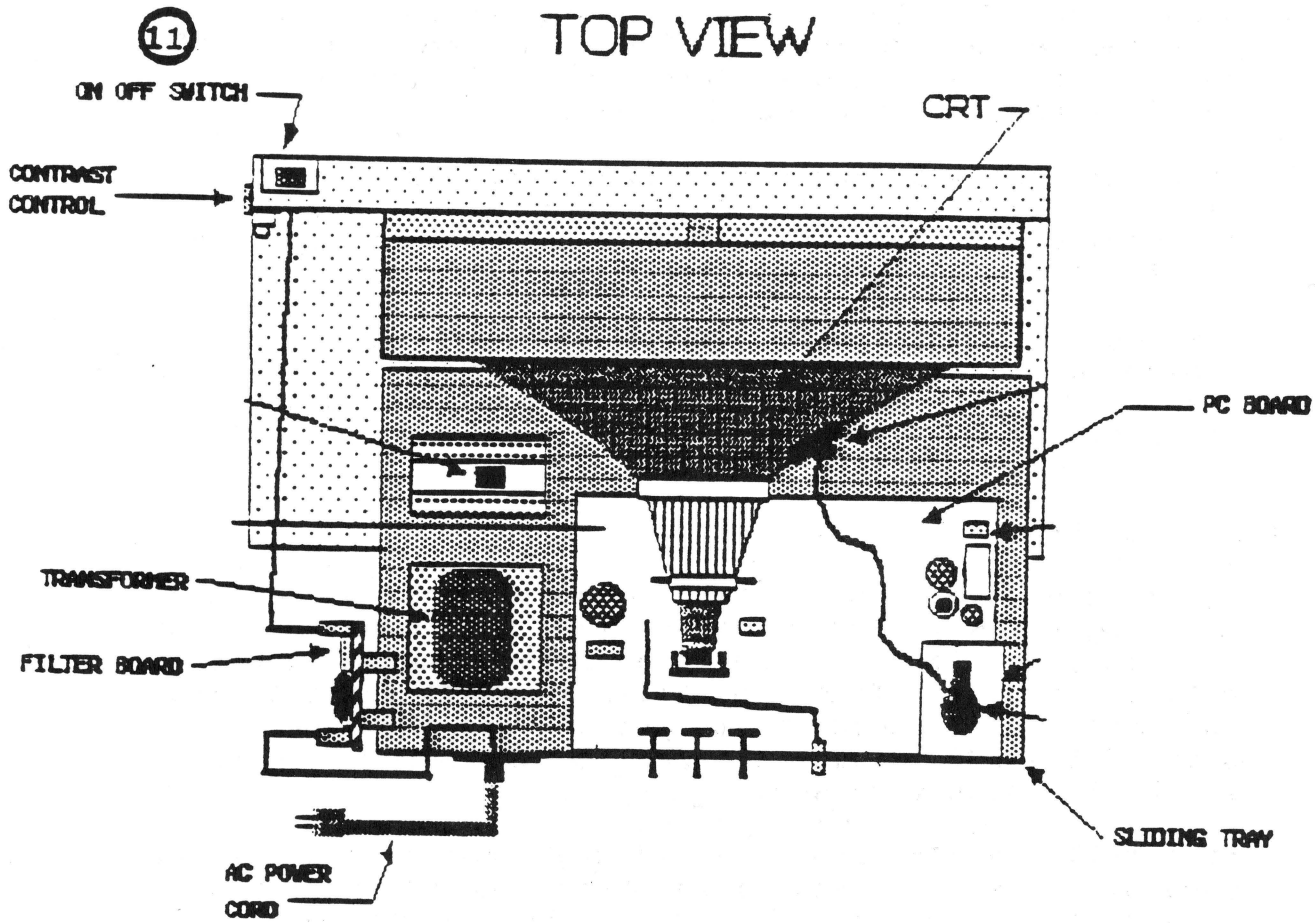

Figure 3

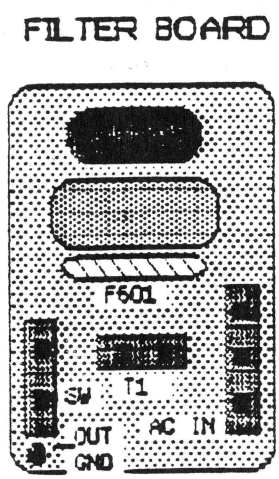

Figure 2

apple computer

POWER SWITCH REMOVAL

1. Remove back case (see BACK CASE REMOVAL procedures).

2. Remove the two (2) screws that mount the switch (see Figure 3.11).

3. Cut the tie wrap on the switch, power cord and transformer wires.

4. Disconnect the switch leads from the filter PCB (see Figure 2).

5. To install the power switch, follow this procedure in reverse.

FILTER BOARD

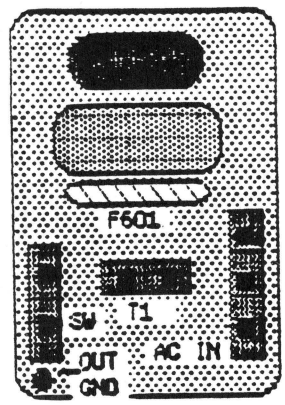

Figure 2

TOP VIEW

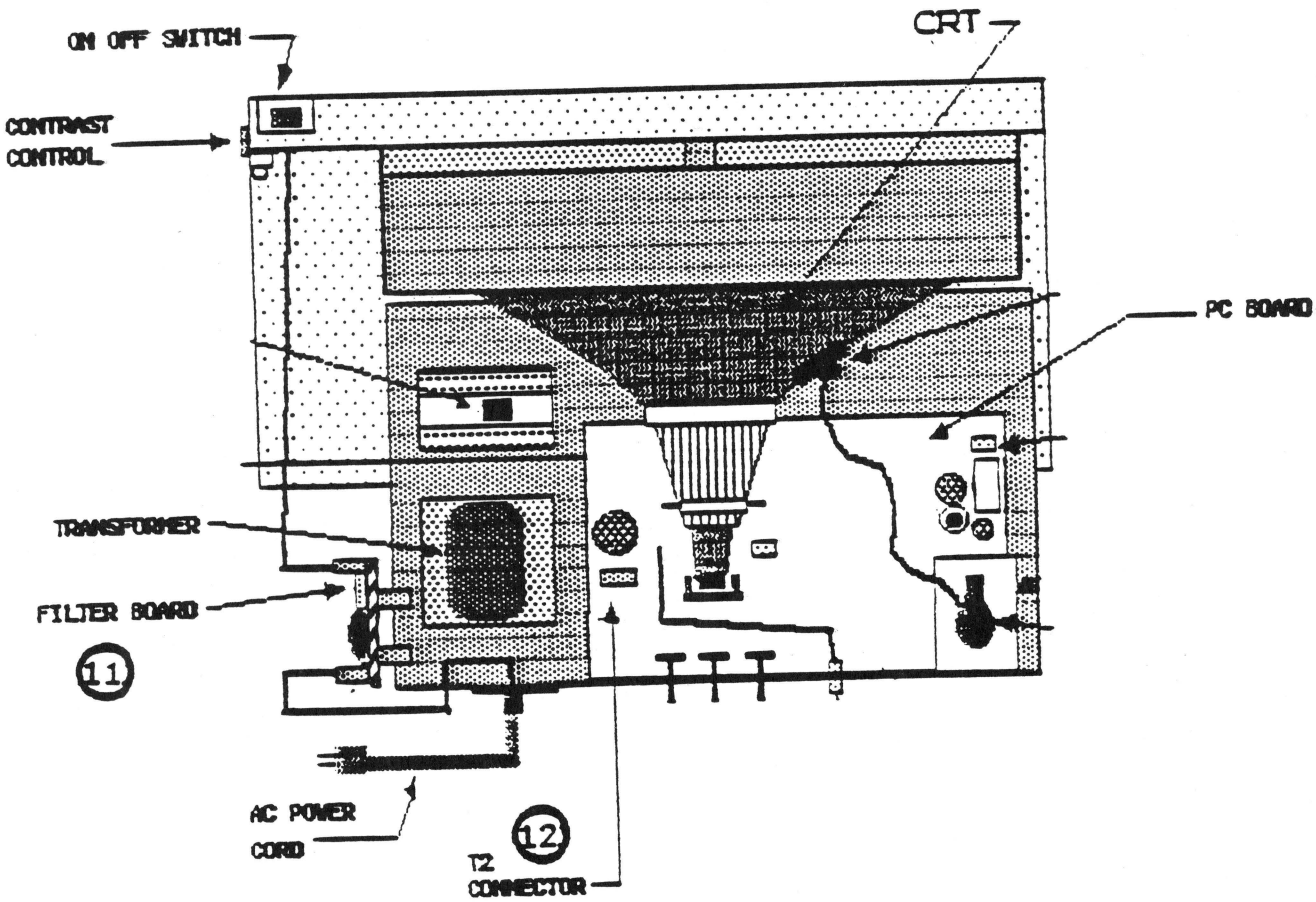

Figure 3

apple computer

TRANSFORMER REMOVAL

1. Remove back case (see Back Case Removal procedure).

2. Disconnect the black and white pair of wires at T1 on the filter board (see Figure 3. 11).

3. Disconnect the red pair of wires located at T2 on the rear edge of the main PCB (see Figure 3. 12).

4. Remove the two transformer mounting screws.

5. Remove the transformer from the Monitor.

6. Follow the above procedure in reverse to install the transformer.

apple computer

MONITOR // TECHNICAL PROCEDURES

SECTION 3

ADJUSTMENT PROCEDURES

Contents:

General Information.....3.3
Yoke adjustment.....3.5
Introduction.....3.5
Set up procedures.....3.7
Tilt adjustment.....3.11
Ring adjustment.....3.13
Geometric adjustment.....3.15

PC board adjustment.....3.17
Introduction.....3.17
Set up procedures.....3.19
Vertical adjustment.....3.23
Horizontal adjustment.....3.27

General Information

To use these adjustment procedures requires test patterns to be generated to the screen. For these procedures, use either the Monitor Test Pattern Diskette (part #686-0026) or the Apple //e Diagnostic ROM Card (part #661-94086) to generate these patterns. The ROM card can only be used with the Apple //e. It generates one pattern. The test diskette can generate three different patterns. The different patterns are used for the different adjustments.

One source of patterns is not necessary better then the other. The only advantage of the test diskette is that it can be used with a greater number of systems.

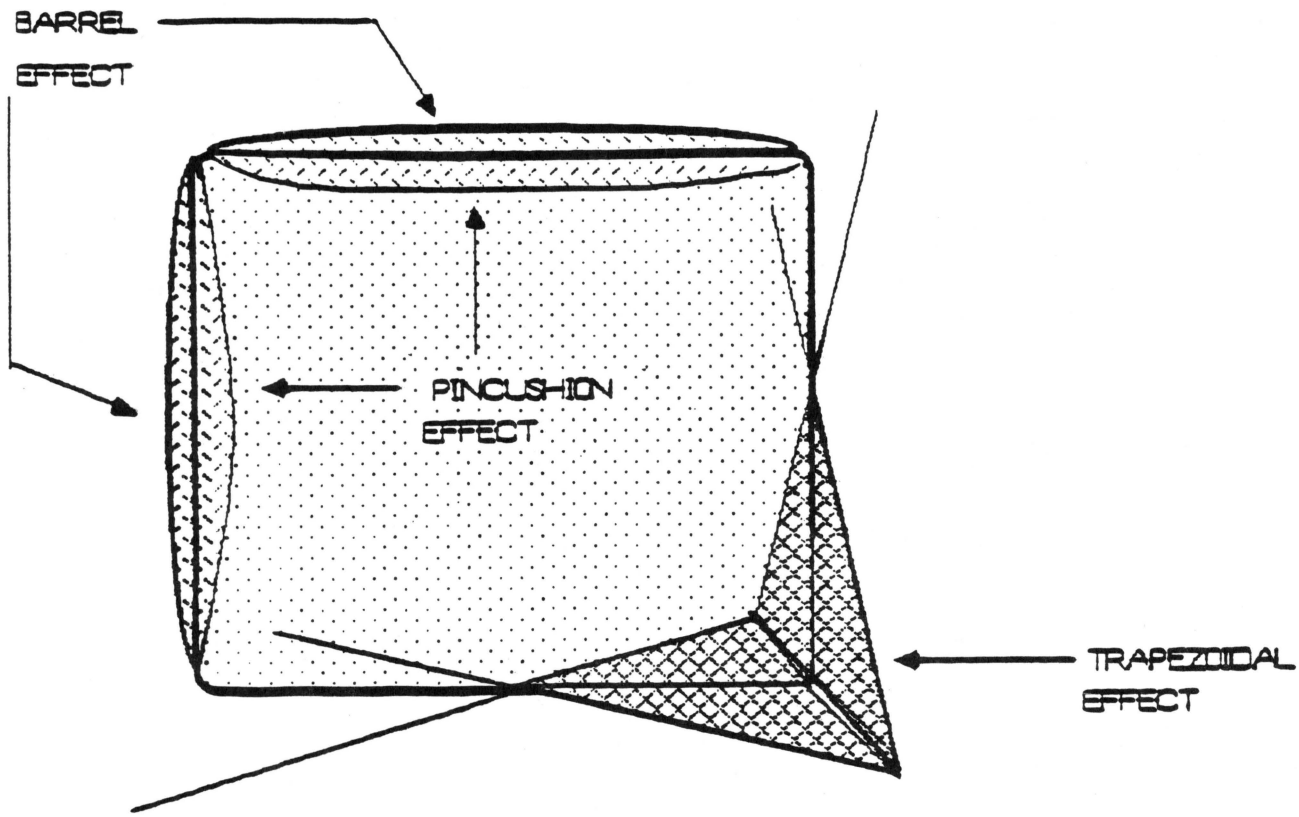

Figure 1

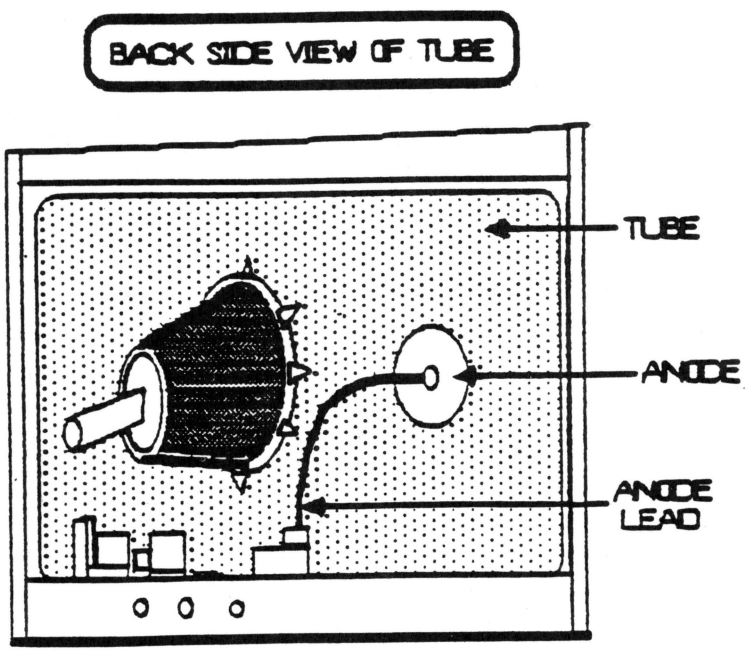

Figure 2

apple computer

YOKE ADJUSTMENTS

INTRODUCTION

The following procedures are used to adjust the yoke assembly whenever the yoke or picture tube has been replaced. There are three major adjustments that might be needed, depending on if the picture is tilted, not centered, or if geometrically distorted. (By geometric distortion we mean barreling/pincushioning effect and the trapezoidal effect [see Figure 1]). They are the tilt adjustment, the centering adjustment, and the geometric adjustment. It is possible all three adjustments might be needed or maybe none of them will have to be done.

Materials needed:

Working Monitor //
Apple][or //e
Medium phillips screwdriver
Flexible 12 inch ruler
Monitor test diskette (part #686-0026) or //e Diagnostic ROM card (part #661-94086).
Washable fine point marking pen

CAUTION

THERE ARE EXTREMELY HIGH VOLTAGES ON THE TUBE, THE ANODE, AND THE ANODE LEAD. IN THESE ADJUSTMENTS YOU WILL BE PUTTING YOUR HAND NEAR THESE VOLTAGES. IT IS IMPERATIVE THAT YOU WATCH WHAT YOU ARE TOUCHING OR ADJUSTING ON THE YOKE ASSEMBLY; OTHERWISE INJURY CAN RESULT. AVOID TOUCHING THE TUBE, ANODE, AND ANODE LEAD (SEE FIG.2). NEVER HOLD ON TO THE CHASSIS WITH YOUR OTHER HAND WHILE MAKING THESE ADJUSTMENTS. PUT YOUR OTHER HAND IN YOUR POCKET OR BEHIND YOUR BACK WHILE MAKING THESE ADJUSTMENTS.

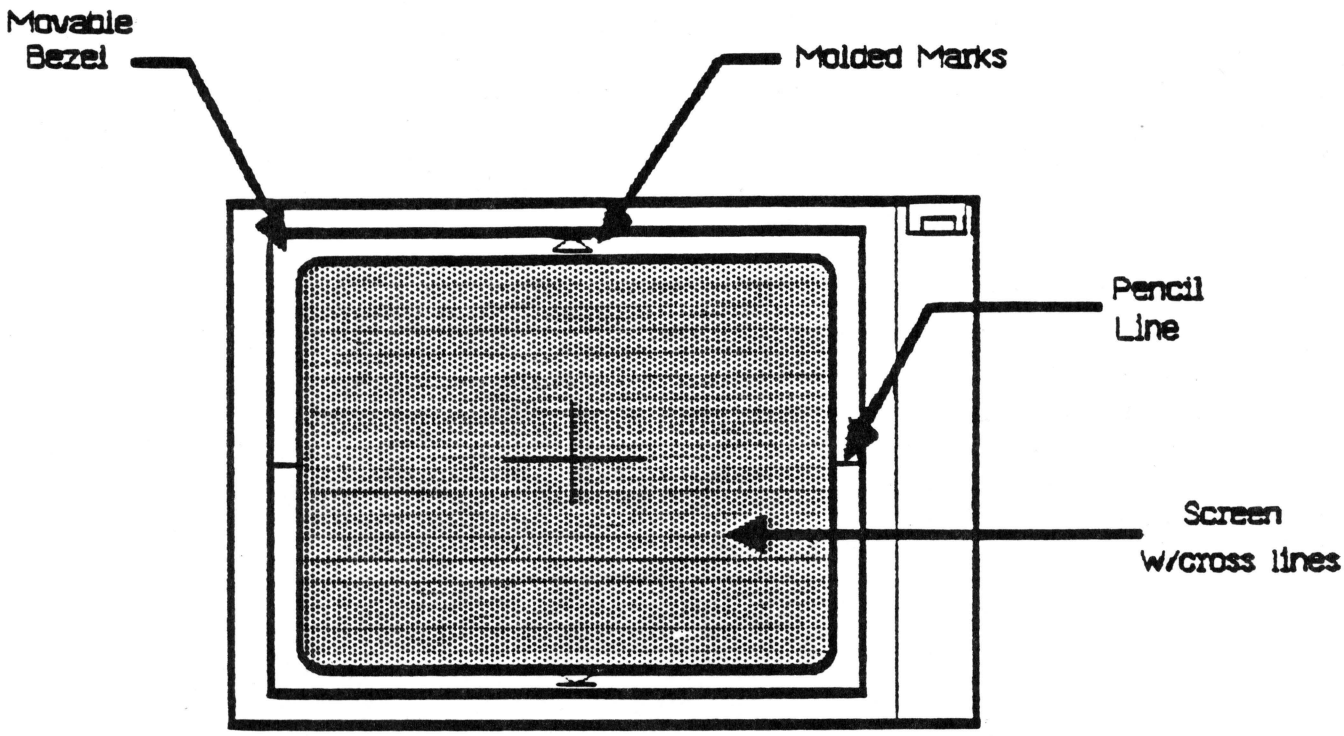
Movable
Bezel
Molded Marks
Pencil
Line
Screen
w/cross lines

Figure 3

SET UP PROCEDURE

1. In order to have some point of reference for centering the image it is necessary to mark the screen with the washable marker in the following manner:

    a) Refer to figure 3 on opposite page.

    b) On the edge of the bezel (thats the movable part that holds the tube and tilts up and down) measure from the top half way down (approximately 4/1/4 inches) and make a pencil mark on each side of the bezel.

    c) Take the flexible ruler and put each end of it on the marks on the bezel. Push the center of the ruler on the screen and make a line on the screen about 2 inches in what looks like the center of the screen.

    d) Next find the two molded marking on the top and bottom of the bezel that look like diodes. This is the center of the screen for the vertical line.

    e) Put the ruler ends on the center of the triangles and push the center of the ruler against the middle of the screen

    f) Make a vertical line along the edge of the ruler; it should intersect with the horizontal line and will result in a cross line (+) on the screen.

2. Remove the Monitor // case (see Take-apart section).

3. Connect the video cable from the Monitor // to the Apple.

4. If you are using the test diskette, do the following:

    a) Insert the diskette in the disk drive.

    b) Power up the system.

    c) Select "pattern 1" from the menu.

5. If you are using the //e diagnostic ROM card, do the following:

    a) Insert the ROM card into slot 1 or 2 of the //e.

Continued on next page

b) Make sure the switch on the top of the card is pointing to the rear of the system.

c) Power up the system.

d) Select the Video Tests from the menu (V).

Note: If the menu does not appear when the power is turned on and the disk drive continues to whirl, the switch is in the wrong position. Shut off the system, change the switch and turn power on.

NOTE: There are two ways you can view the patterns and make the adjustments. One is to view the screen and reach around to the back to do the adjusting. The second way is to set up a mirror in front of the screen and view it from the back side while making the adjustments. If you use the reaching method, be sure you know what you are touching.

6. Determine if the pattern on the screen is tilted, centered incorrectly, or geometrically distorted; then proceed to the correct adjustment section as follows:

   a) Picture tilted: Tilt adjustment
   b) Picture not centered: Ring adjustment
   c) Geometric distortion: Geometric adjustment

7. If you are not sure what adjustment is needed or if all of them look incorrect then do all three adjustments in sequence a, b, and c.

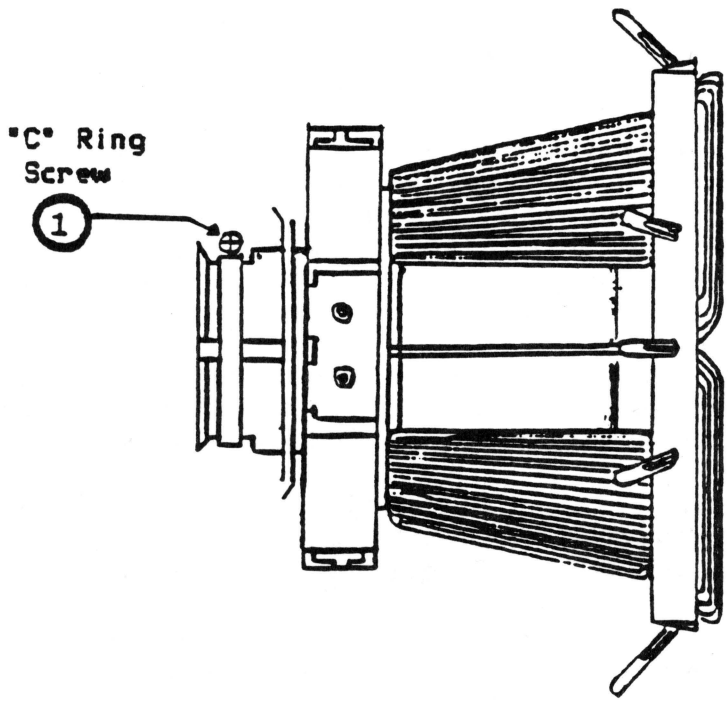

DEFLECTION YOKE ASS'Y

Figure 4

apple computer

TILT ADJUSTMENT

CAUTION

THERE ARE HIGH VOLTAGES ON THE YOKE ASSEMBLY; HANDLE ONLY THE PLASTIC PARTS OF THE YOKE. DO NOT TOUCH THE WIRES.

1. If using the test diskette select "pattern 1" from the menu. If using the ROM card, select Video Pattern.

2. Locate the yoke on the stem of the picture tube (see Figure 4).

3. Locate and loosen the phillips screw that hold the C ring on the yoke. The screw is toward the back part of the yoke (see Figure 4.1). Do not remove the screw, just loosen it enough to make the yoke mobile.

Note: If the yoke is tacked to the tube with RTV glue, you will have to cut the glue before you can move the yoke. Power off the Monitor before attempting to make these cuts. Remember that the Anode of the tube retains a voltage potential that can shock you even though the power is off. Be extremely careful when doing this procedure.

4. When the yoke assembly is loose, turn it clockwise and counterclockwise and watch the whole picture tilt. Then gently move the assembly backward and forward on the stem and see how the whole raster can be made smaller of larger.

5. Push the yoke forward on the stem as far as it will go to obtain the largest raster possible. The ideal size raster would fill up most of the screen and just leave about a 1/2 inch boarder on all four sides. This might require doing the PC board height and width adjustment to get the proper size.

6. Adjust the yoke so that the image is level with the line you drew on the screen or with the top of the screen. If it is hard to tell if its level, hit CR and return back to the menu (if you are using the test diskette) and select "pattern 2", a grid pattern.

7. Retighten the C ring screw. Be careful not to overtighten as that could cause damage to the tube stem. Just tighten enough to be snug.

8. Tack the yoke to the Tube using some RTV glue.

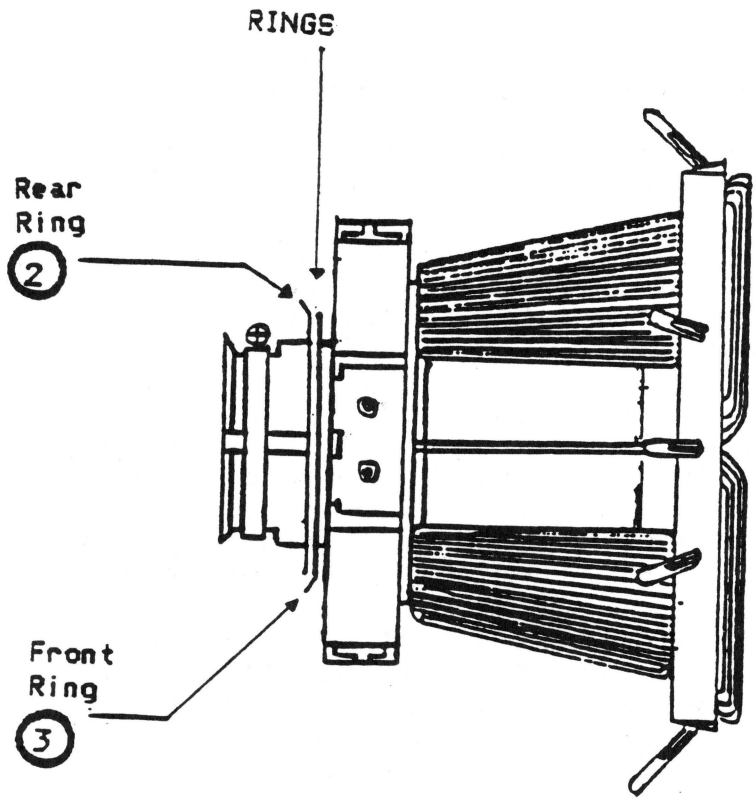

Figure 4

apple computer

RING ADJUSTMENT

This adjustment is made when the image is not centered.

1. If using the test diskette select "pattern 1" from the menu. If using the ROM card, select Video Pattern.

2. Locate the two ferrite metal ring magnets on the rear part of the yoke (see Figure 4).

3. The ring that is closest to the rear of the yoke (see Figure 4.2), is called the coarse adjustment. Rotate this ring and observe the effect it has on the centering of the image. Position it so that the image is as close to center as possible.

4. Now rotate the front ring (see Figure 4.3). This is the fine adjustment. Rotate it until the image is centered on the cross lines you put on the screen. It might be necessary to hold the rear ring steady as you move the front one.

5. The final result should be that the center of the pattern lines up with the cross lines on the screen.

GEOMETRIC ADJUSTMENTS

There are two different geometric effects that can be seen on the screen. One is called pincushioning and barreling (see example Figure 5.1, and 5.2). The other is the trapezoidal effect (see Figure 7.1). Both are adjusted with the rotary magnets, however each one is done separately.

Pincushion/Barrel Correction

If the image shows either effect shown in figure 5.1 or 5.2 then it will be necessary to correct it by doing the following:

1. If using the test diskette select "pattern 3" from the menu. If using the ROM card, select Video Pattern.

2. Push a magnet on the yoke mounting pin as shown in figure 5.3. A magnet should be placed only on the pin that corresponds to the affected area.

3. Rotate the magnet to obtain the desired raster, labeled "NORMAL" on figure 5.4.

4. If the desired raster cannot be obtained, add a second magnet to the yoke mounting pin. Both magnets must be aligned, as shown in figure 6 and then rotated simultaneously.

5. Adjust all the sides with magnets until they all line up correctly.

Trapezoidal Adjustment

Figure 7 shows the trapezoidal effect. Look at your screen and see if any of the corners exhibit the trapezoidal effect. If any do, then perform the following adjustment:

1. If you are using the test diskette select "pattern 3" from the menu. If using the ROM card, select Video pattern.

2. Push a magnet onto the yoke mounting pin as shown in figure 7.2. The magnet should be placed only on the pin that corresponds to the affected area.

3. Rotate the magnet to obtain the desired raster, labeled "NORMAL" in figure 7.3.

4. If the desired raster cannot be obtained, add a second magnet to the pin. Both magnets must be aligned as in figure 7 then rotated simultaneously.

5. Do the adjustment until all the corners fit the "NORMAL" figure.

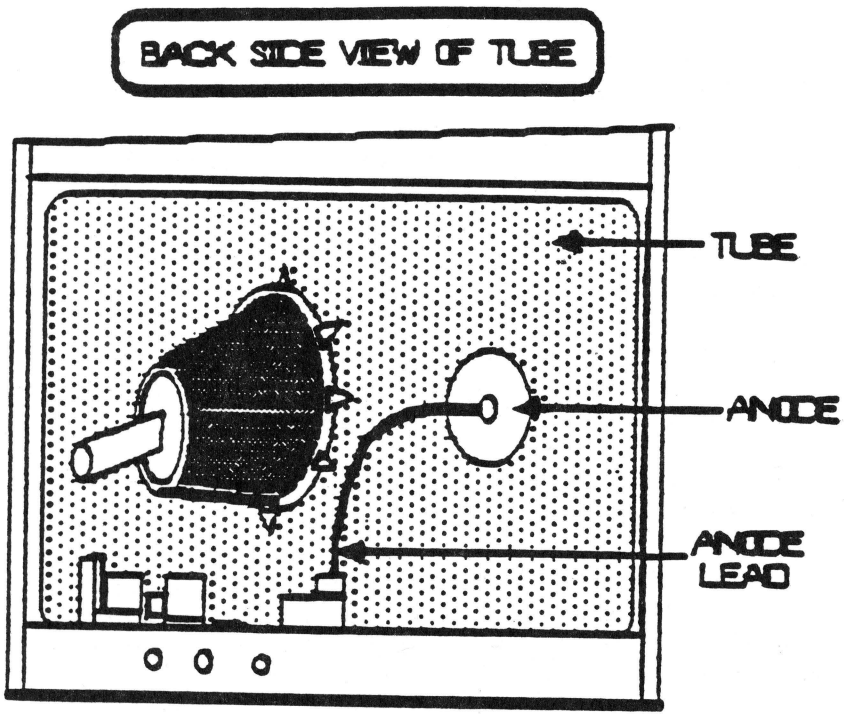

Figure 8

apple computer

PCB ADJUSTMENTS

INTRODUCTION

After replacement of the PC board on the Monitor // the horizontal or vertical alignment may need adjustment. This procedure covers these adjustments. It is important that you read all the steps completely before beginning the adjustments, as several of them interact with each other; so if it looks like a step is not working, its possible that another step will correct the problem.

Materials Needed:

Working Monitor //
Apple][or //e
Monitor test diskette (part #686-0026) or the Apple //e diagnostic ROM card (part # 661-94086).
Plastic hex tip iron core adjustment tool (size 0.100)
Plastic square tip coil adjustment tool (size 1/8" square) one manufacture is Spectrol
Small plastic flatblade screwdriver (tweeker).

CAUTION

YOU WILL BE WORKING WITH A LIVE HIGH VOLTAGE PICTURE TUBE. HIGH VOLTAGE IS PRESENT ON THE ANODE OF THE PICTURE TUBE, THE ANODE CAP, AND ANODE LEAD, (SEE FIG. 8). DO NOT TOUCH THE TUBE, ANODE CAP, OR ANODE LEAD, EXTREME SHOCK CAN OCCUR. DO NOT TOUCH OR HOLD ON TO THE CHASSIS WITH THE OTHER HAND KEEP IT BEHIND YOUR BACK OR IN YOUR POCKET WHEN MAKING THE ADJUSTMENTS.

apple computer

SET UP PROCEDURE

1. Remove the Monitor // case (see Take-apart section).

2. Connect the video cable from the Monitor to the Apple video out jack.

3. If you are using the test diskette, do the following:

   a) Insert the diskette in the disk drive.

   b) Power up the system.

   c) Select "pattern 3" from the menu.

4. If you are using the //e diagnostic ROM card, do the following:

   a) Insert the ROM card into slot 1 or 2 of the //e.

   b) Make sure the switch on the top of the card is pointing to the rear of the system.

   c) Power up the system.

   d) Select the Video Tests from the menu (V).

   Note: If the menu does not appear when the power is turned on and the disk drive continues to whirl, the switch is in the wrong position. Shut off the system, change the switch and turn power on.

5. View the screen and evaluate the vertical and horizontal alignment and linearity, determine which one needs correction and proceed to the correct adjustment. Remember that there is interaction between the two adjustment and you might have to do both to correct any problems.

Continued on next page

When evaluating the pattern do not use the characters or grid boxes in the corners as examples, use the middle of the rows. If the corners look incorrect even after adjustments have been made then it is possible there is a Yoke alignment problem and you should proceed to that section. Other guide lines to follow for evaluating the vertical and horizontal alignments are as follows:

Vertical:

Do the characters or grid boxes in the top and bottom rows have the same linearity?

Are the characters or grid boxes stretched out or compressed?

Is the picture rolling?

Is the image pushed more to the top or bottom?

Horizontal:

Is the linearity of the characters or grid boxes on both sides of the screen the same?

Is the width of the characters or boxes the same?

Is the picture tearing?

Is the picture rolling in a diagonal movement on the horizontal plane.

NOTE: There are two ways you can view the patterns and make the adjustments. One is to view the screen and reach around to the back to do the adjusting. The second way is to set up a mirror in front of the screen and view it from the back side while making the adjustments. If you use the reaching method, be sure you know what you are touching.

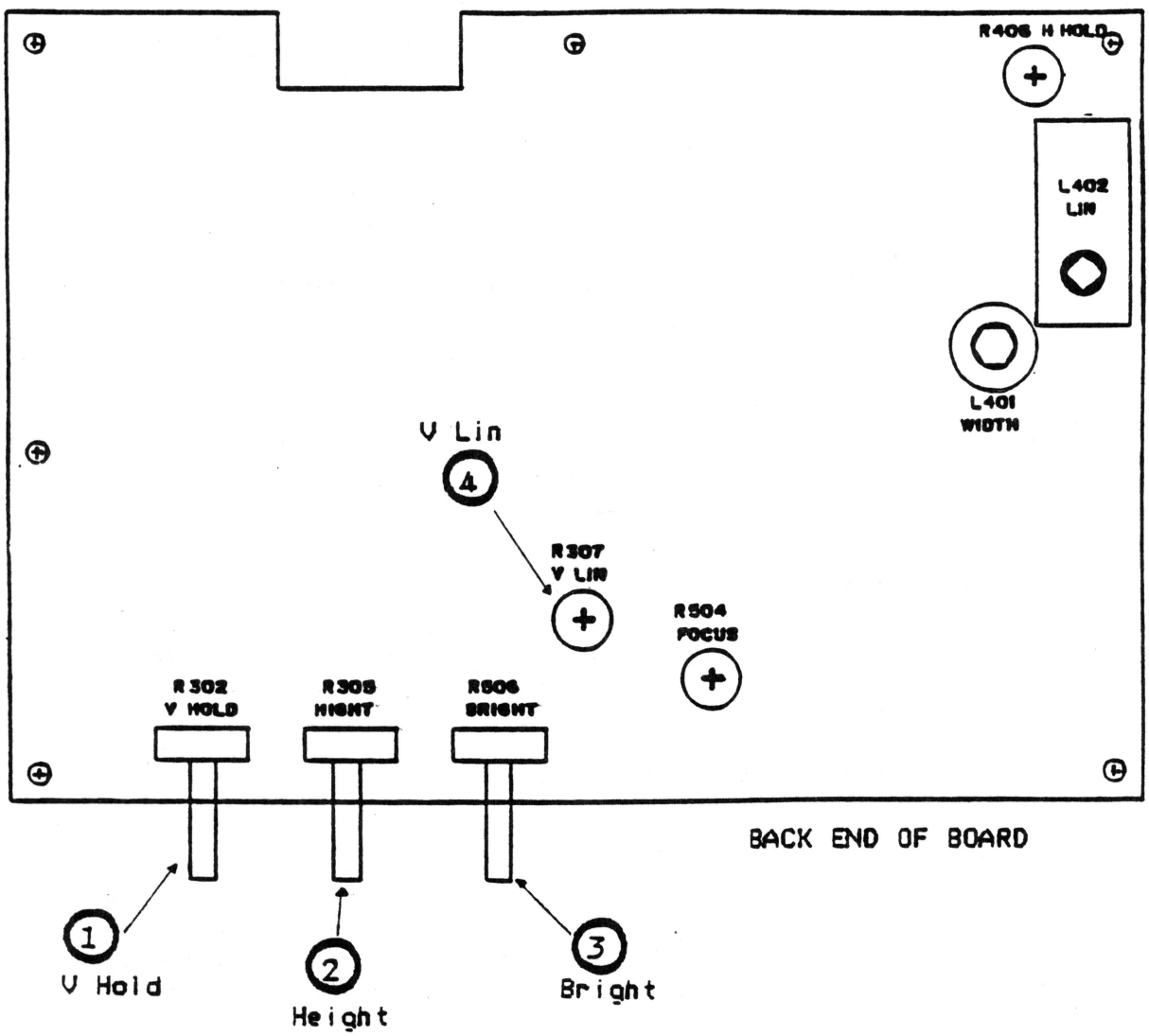
R406 H HOLD
L402
LIN
L401
WIDTH
V Lin
4
R307
V LIN
R504
FOCUS
R302
V HOLD
R305
HIGHT
R506
BRIGHT
BACK END OF BOARD
1
V Hold
2
Height
3
Bright

Figure 9

VERTICAL ADJUSTMENTS

1. Set the vertical hold control R302 (see Figure 9.1) near the mechanical center of its rotation. This should lock the picture on the screen and prevent any rolling.

2. Linearity; If the vertical linearity is off, adjust R307 (see Figure 9.4) until the best linearity is found. Compare top and bottom characters or grid boxes and try to get them even. It is possible to reach the end of the adjustment range of the pot and find that the linearity is still not correct. That's because the height adjustment can affect the linearity. If this happens leave the pot at the end of its range and proceed to step 3.

3. Height: If the vertical height of the image is incorrect, then adjust R395 (see Figure 9.2) until the desired height is obtained. A good method is as follows:

    a) Turn height control R305 counterclockwise to the end of the pot. The image will compress on the screen but sill be legible.

    b) Turn the brightness control R506 (see Figure 9.3) clockwise until you can see black edges at the top and bottom of the screen. If you don't see black edges on the top and bottom, turn the height pot R305 counterclockwise until the pattern is squeezed and the black area appears. If the pattern becomes blurred, then the brightness control is turned too far.

    c) Adjust the height control R305 so that the black edges just disappear on the top and bottom of the screen. That will make the whole screen green in color and the characters or grid boxes just about the correct height. You can go a little further if you prefer larger characters.

    d) Turn the brightness control R506 counterclockwise until the background on the screen goes black and the pattern is bright.

4. Re-evaluate the vertical linearity of the characters or boxes as adjusting the height can affect the linearity. If the linearity has changed, repeat step two (2) above. However once adjusted do not repeat step three and four again. Proceed to 5.

Continued on next page

5. If necessary readjust the vertical hold control R302 (Figure 9.1) until the picture locks (stops rolling) on the vertical sync.

6. Turn the Monitor off and on and see if the picture rolls. If it does then repeat steps 5 and 6 until it stops rolling.

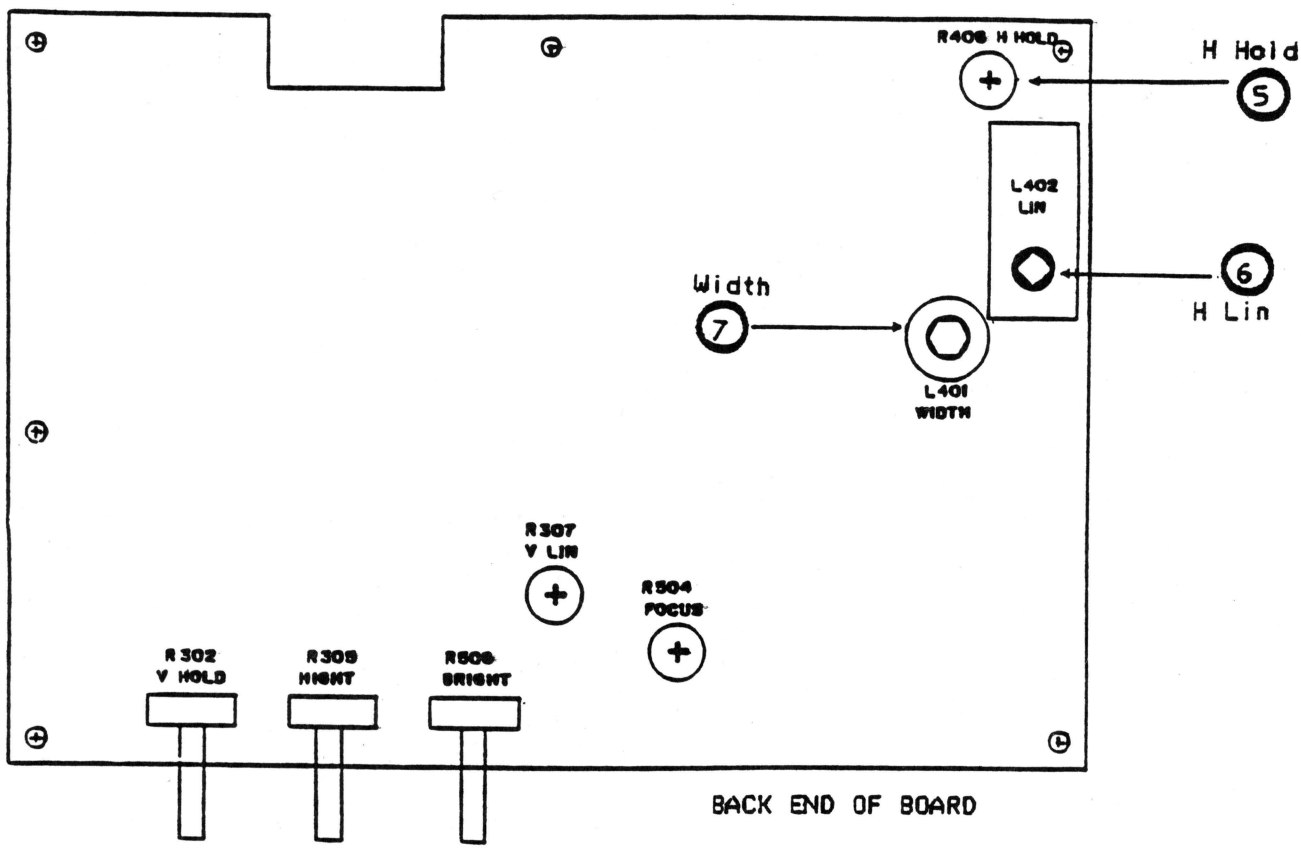
R406 H HOLD
H Hold
5
L402
LIN
6
H Lin
Width
7
L401
WIDTH
R307
V LIN
R504
FOCUS
R302
V HOLD
R305
HIGHT
R506
BRIGHT
BACK END OF BOARD

Figure 9

HORIZONTAL ADJUSTMENTS

1. If the picture on the tube is not locked and centered, or if it is tearing, adjust pot R406 (see Figure 9.5). Be careful on this adjustment, as you will be physically close to the anode and anode lead in order to get to the pot.

2. If the raster will not lock in after adjusting the pot R406 to both ends, then it is possible there is a problem with the DC power supply.

3. Observe one row of characters or grid boxes and look for width variations on both sides of the screen. If they are all the same width through out the row then the linearity is O.K., proceed to step 5. If they are not, then adjust the linearity (step 4).

4. Linearity: In most units the coil L402 (see Figure 9.6) will be preadusted and sealed at the factory so you won't be able to change it. In this case proceed to step 5 and see if the width adjustment will help the linearity. If you do have a unit with an adjustable coil, use the square plastic adjustment tool and turn it until the linearity looks correct. If you have adjusted the coil as far as it will go and the linearity is still wrong, then proceed to the width adjustment, step 5.

5. Width: Check the width of the image on the screen. If it looks too narrow or too wide, then use the hex adjustment tool and adjust L401 (see Figure 9.7) until the desired width is obtained. The image should be an equal distance (approximately 1/2 inch) from each side of the screen, and yet not squeezed together. If the linearity is wrong on one side, this adjustment might correct it. It must be remembered that this is not a centering adjustment; don't squeeze the image just to get it centered.

6. If the unit has an adjustable linearity coil then see if the linearity has changed after step 5, if it has, then touch up L402 until the linearity is correct.

7. If all the adjustments have been made and the linearity is still incorrect then suspect a problem with the components on the PC board.

SECTION 4

TROUBLESHOOTING

Contents:

Introduction.....4.3
No raster.....4.3
One horizontal raster line appears.....4.3
One vertical raster line appears.....4.3
Raster deformed abnormally.....4.3
Abnormal raster with winding or
excessive picture fluctuation.....4.4
Spot remains with unit off.....4.4
Brightness range abnormal.....4.4
Raster size small picture
abnormally bright 4.4
No vertical synchronization.....4.4
Raster not centered.....4.4
No picture no contrast.....4.4
Picture/characters inclined.....4.4
Fine noises in picture characters shiver....4.5
15 or more seconds for picture to appear....4.5
Picture appears/disappears.....4.5
Horizontal linearity bad.....4.5
Vertical linearity bad.....4.5
Won't focus.....4.5

apple computer

INTRODUCTION

This is the troubleshooting section. IT is comprised of a symptom chart showing the symptom, and an action to be taken to rectify the problem. The best way to use this section is to look on the chart to fine the symptom that matches what the defective Monitor is doing, then try the recommended action to be taken.

SYMPTOM	ACTION
NO RASTER	Check fuse on filter board, replace if blown. Check that all connectors are secure on the filter board and the PC board. Replace Power Switch Replace filter board. Replace PC board Replace Power Transformer Replace Picture Tube
ONE HORIZONTAL RASTER LINE APPEARS	Replace PC board Replace Yoke
ONE VERTICAL RASTER LINE APPEARS	Replace PC board Replace Yoke
RASTER DEFORMED ABNORMALLY	Do Yoke Adjustment Replace Yoke

Continued on next page

apple computer

SYMPTOM	ACTION
ABNORMAL RASTER WITH WINDING OR EXCESSIVE PICTURE FLUCTUATION	Replace PC board
SPOT REMAINS WITH UNIT OFF	Replace PC board
BRIGHTNESS RANGE ABNORMAL	Replace PC board Replace filter board Replace Power Transformer
RASTER SIZE SMALL PICTURE ABNORMALLY BRIGHT (HIGH VOLTAGE ABNORMALLY HIGH)	Replace PC board
NO VERTICAL SYNCHRONIZATION	Replace PC board
RASTER NOT CENTERED	Turn Yoke centering magnets. See Yoke adjustment.
NO PICTURE NO CONTRAST	Replace PC board
PICTURE/ CHARACTERS INCLINED	Turn deflection Yoke See Yoke adjustment

Continued on next page

apple computer

SYMPTOM	ACTION
FINE NOISES IN PICTURE. CHARACTERS SHIVER	Replace PC board
15 OR MORE SECONDS FOR PICTURE TO APPEAR	Change CRT
PICTURE APPEARS DISAPPEARS	Replace PC board Replace picture tube
HORIZONTAL LINEARITY BAD	Check Horizontal adjustment See PC board adjustment Replace PC board
VERTICAL LINEARITY BAD	Check Vertical Adjustment See PC board adjustment
WON'T FOCUS	Replace PC board Replace picture tube

Monitor II Technical Procedures

Section 5

Illustrated Parts List

The figures and lists below include all piece parts that can be purchased separately from Apple for the Monitor II, along with their part numbers. These are the only parts available from Apple. Refer to your Apple Service Programs manual for prices.

Contents:

Illustrated Parts List..... 5.1

NOTE: UNLESS OTHERWISE SPECIFIED

REV	ZONE	ECO #	REVISION	APPD	DATE
A		5493	INITIAL RELEASE		

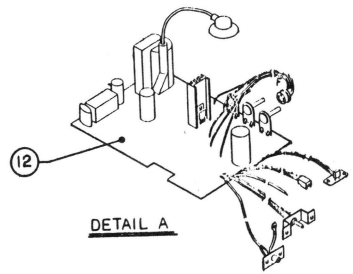

DETAIL A

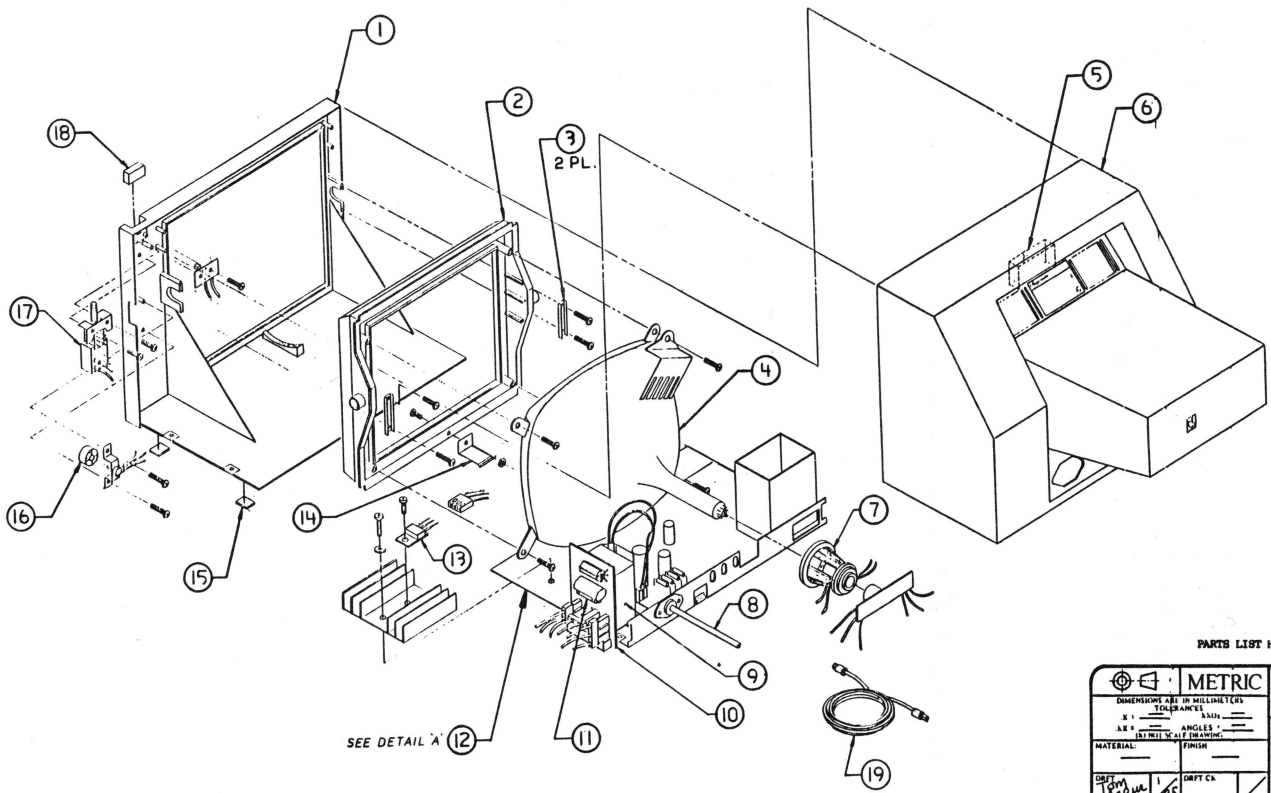

PARTS LIST HELD BY APPLE SERVICE TRAINING.

METRIC	apple computer inc.
DIMENSIONS ARE IN MILLIMETERS TOLERANCES X = ___ .XXn = ___ .XX = ___ ANGLES = ___ (8:1 MILL SCALE DRAWING)	NOTICE OF PROPRIETARY PROPERTY THE INFORMATION CONTAINED HEREIN IS THE PROPRIETARY PROPERTY OF APPLE COMPUTER, INC. THE TRANSFEROR AGREES TO THE FOLLOWING: (i) TO MAINTAIN THIS DOCUMENT IN CONFIDENCE (ii) NOT TO REPRODUCE OR COPY IT (iii) NOT TO REVEAL OR PUBLISH IT IN WHOLE OR PART
MATERIAL: — FINISH: —	TITLE: ILLUSTRATED PARTS LIST MONITOR // SERVICE
DRFT: Tom Angus 1/85 — DRFT CK:	
ENG APPVL: — MFG APPVL:	
RELEASE: — ENGG DIV: SERVICE	
DRAWER: — SCALE: NONE	SIZE: C — DRAWING NUMBER: 070-0184-A — SHT 1/1

070-0184-A 1/1

BISHOP GRAPHICS/ACCUPRESS REORDER NO A19999

Monitor II

Item	Part No.	Description
1	815-0779	Enclosure, Bezel
2	815-0780	Enclosure, Mask
3	805-0200	Plate, Pivot Retaining
4	076-0099	Monitor II CRT Module
5	815-0786	Filler, Handle Cavity
6	815-0778	Enclosure, Rear Housing
7	970-0453	Deflection Yoke
8	970-0629	Power Cord
9	970-0447	Power Transformer, 115V
10	669-0211	PCB, Line Filter
11	740-0106	Fuse, .5A, 250V, Quick Acting (Domestic, 110V only)
	740-0011	Fuse, .5A, 250V, Quick Acting, Pigtail (Domestic, 110V only)
	740-0200	Fuse, 1A, 250V, Slow Blow (Euro/Intl only)
	740-0070	Fuse, 1A, 250V, Slow Blow, Pigtail (Euro/Intl only)
12	661-75134	Main Electronics Assembly
13	353-7815	IC,7815, 15V POS. Volt Reg. IC601
14	805-0202	Spring, Ratchet
15	865-0020	Foot, .81 IN SQ, .35 IN THK, Black
16	815-0781	Knob, Contrast
17	970-0445	Power Switch Assembly, 120V
18	815-0787	Knob, Power Switch
19	590-0025	Cable, Monitor II, /// Video

apple computer

October 15, 1984

IMPORTANT SERVICE INFORMATION

This **October Technical Procedures Mailing** contains revisions and/or additions to the Apple Service, Level I Technical Procedures Manuals (072-0062).

The **Mailing** also contains the following **Service and Support Notices:**

- Apple //e - Apple Numeric Keypad Compatibility
- Apple /// Profile Notice Clarafication
- AppleColor Monitor 100
- Apple Mouse // Interface Card Part Number Correction
- DataComm Support Program
- MAC 512K AppleCare Part Number Correction
- Mactest Diagnostic Upgrade
- New AppleCare Policies

Also included is a Document Control Sheet for the Apple Service, Level I Technical Procedures Manuals (P/N 072-0062).

The Document Control Sheet is to assist you in removing and inserting pages from your manual. **Please store this Document Control Sheet behind the Table of Contents at the front of the manual, Volume I.**

If you would like more copies of the Apple Service, Level I Technical Procedures Manuals and subscriptions, you may order them from your Apple Support Center (see part number, above).

Thank you.

apple computer

SERVICE AND SUPPORT NOTICE

APPLE //e - APPLE NUMERIC KEYPAD COMPATIBILITY

A compatibility problem has been discovered between some new Apple //e systems and the Apple Numeric Keypad.

Specifically, special function keys (arrows, return, etc.) on the Keypad do not work properly when used with an Apple //e containing a "revision C" keyboard ROM. Revision C ROM (Part Number 342-0132-C) was first shipped with the Apple //e after 8/25/84.

If an Apple //e customer encounters difficulty with the special function keys on the Numeric Keypad, check to see if the Apple //e logic board contains the "Revision C" keyboard ROM. This is located at E-12 on the //e logic board.

If the logic board does contain the "revision C" version of the ROM, replace this with any other revision level Apple //e keyboard ROM from service stock (for example: Part Numbers 342-0132-A or 342-0132-B). DO NOT REPLACE THE ENTIRE LOGIC BOARD.

Dealers should verify that each Numeric Keypad sold with an Apple //e has the correct ROM installed.

This repair is to be performed free for the customer as if under warranty and is eligible for warranty reimbursement to the dealer.

Please reference Attachment A (on the reverse side of this Read & Post) for an example of correctly completing an SRO form in this situation.

(OVER)

Service Repair Order

SRO 444444

JOHN'S COMPUTER WORLD
3333 Maple Street
Anytown, USA

(ATTACHMENT A)

6699
Dealer Account #

Related #

Customer: Kathy Spencer
Address: 96 Apple Street
Anytown, USA

Home Phone: _____ Office: _____

System Type: Apple 2E
Product # A2P2043 Serial # 121212
Customer Equipment: Apple 2E 121212
Numeric Keypad 343434

Date Received: ☑ am ☐ pm 10 / 1 / 84
Date Promised: ☐ am ☑ pm 10 / 2 / 84

✓ Warranty
~~Purchase Date~~: Rev / 'C' / ROM
_____ AppleCare Number: _____
Expiration Date: _____ / _____ / _____
_____ Other: _____
Date: _____ / _____ / _____
_____ Time & Material Est. $ _____
☐ Cash ☐ Charge ☐ COD

Trouble Reported: Numeric keypad function keys do not interface properly with the Alle

Repaired By: John Francis Repair Time: 5 min. Date Completed: ☑ am ☐ pm 10 / 1 / 84
Comments: Replaced Rev. 'C' character ROM on Logic Board with Revision 'A'.

ITEM #	PART #	DESCRIPTION	AMOUNT
1	342-0132	IC. ROM 16K Keyboard Burn-in	8.00
2			
3			
4			
5			
6			
7			
8			

Total Parts 8.00
Hours: _____ x Labor Rate: _____ = Labor Charge
Other: No charge to replace this part
Tax
Total

NO CHARGE

Customer Signature: Kathy Spencer Date: ☑ am ☐ pm 10 / 2 / 84

CUSTOMER COPY

073-0101

apple computer

****
*
* CLARIFICATION OF THIS 4/15/84 NOTICE
*
****

SERVICE AND SUPPORT NOTICE

APPLE /// PROFILE INTERFACE CARDS

PROBLEM

Potential problems in random data handling/command errors may arise with Apple /// and Profiles when the new RFI shielded cables are used with earlier versions of the Apple /// Interface Card. End Users may get a large number of "Bad Block" indications and in some instances, the Profile is unable to read files saved and sector damage is indicated.

CAUSE

Resistor Array values on the Apple /// Interface Card (at location DM 1 and DM 2) were changed from 330 Ohms to 100 Ohms. Interface Cards with the 330 Ohms resistor arrays (manufactured prior to October 1983) are not compatible with the new Profile Shielded Cable, P/N 590-0202. When the older interface cards are connected to the shielded cables, an impedance mismatch occurs that results in error messages.

ACTION

— The flat ribbon cables (P/N 590-0046) will operate on either the 330 Ohm or the 100 Ohm revisions Interface Card.

— If the RFI Shielded Cable (P/N 590-0202) is to be used, the Apple /// Interface Card for the Profile must have 100 Ohm resistor Arrays at location DM 1 and DM 2. The 100 Ohm resistor Arrays (P/N 112-0107) replace the old 330 Ohm resistor arrays.

— It is recommended that the Apple /// Interface Cards in the Profile Accessory Kits be checked for the 100 Ohm resistor arrays before sale to an end user.

**** NOTE: 10/15/84 Clarification:

WHERE 100 OHM IS MENTIONED ABOVE, THE ACTUAL TERM SHOULD READ:

8 X 100 OHM DIP

apple computer

SERVICE AND SUPPORT NOTICE

APPLECOLOR MONITOR 100 AND 80 COLUMN TEXT/COLOR CARD

```
****************************************
*                                      *
*     UPDATE TO AN AUGUST SERVICE      *
*     AND SUPPORT NOTICE:              *
*                                      *
*      APPLECOLOR MONITOR 100 &        *
*      80 COLUMN TEXT/COLOR CARD       *
*                                      *
****************************************
```

The information below supercedes Section F (Disposition) of the August Service and Support Notice on the AppleColor Monitor 100 and 80 Column Text/Color Card:

F. DISPOSITION

(1) The technical procedures are included in this Service and Support Technical Procedure Mailing.

(2) PARTS ORDERS MAY BE PLACED IN NOVEMBER FOR DECEMBER DELIVERY.

Until that time all failed units should be treated as whole unit exchanges.

Level I's are to exchange failed units under warranty from their finished goods inventory and return their failed units to their Regional Support Center using the following part number:

665-0261 AppleColor Monitor 100

apple computer

****
*
* CORRECTION TO SEPTEMBER
* SERVICE & SUPPORT NOTICE:
*
* PART NUMBER CHANGES
*
****

	Apple Mouse //	Interface Card
Correct Part #'s Are:	661-91185	Service Stock
	665-91185	Exchange Module

apple computer

SERVICE AND SUPPORT NOTICE

ANNOUNCING APPLE'S NEW LIMITED DATACOMM SUPPORT PROGRAM

Apple is making it even easier and more economical for dealers to support Apple data communications products.

In order to sell Apple's data communications products, Apple dealers must participate in Apple's Datacomm Support Program. Apple's Comprehensive Datacomm Support Program was designed to allow Apple dealers to support Apple datacomm products without having to create a complex or costly support group.

Now Apple is introducing an even easier and less expensive datacomm support program for Apple dealers--the Limited DataComm Support Program.

Like the existing Comprehensive Support Program, the Limited Support Program provides dealers with the training and technical assistance necesary to accurately diagnose problems existing within datacomm networks utilizing Apple datacomm products. Yet the Limited Support Program differs from the Comprehensive Program in that it requires a much smaller investment. The new program is custom made for the Apple dealer who 1) isn't ready to make a larger commitment to supporting datacomm or 2) is already highly proficient in datacomm support and needs minimal assistance.

What does the new Limited Support Program provide?

- Videotape/workbook training $350
- Datacomm Technical Procedures Manual... $ 30

These two items are sufficient for supporting the AppleLine product. If other Apple datacomm products are sold, it will be necessary to purchase a 208B synchronous modem for performing remote diagnostics through the Remote Support Center in Cupertino. The cost of the modem is approximately $1,000. Access to the Remote Support Center is $100 per hour.

To participate in the Limited Support Program, the dealer must 1) purchase spare parts inventory--but only what is necessary to service datacomm products already sold and 2) have at least one service specialist trained to service Apple datacomm products on-site.

Details of the new Limited Support Program are included in the Service Programs Service and Support October Mailing as an update to the Service Programs Manual. Also, a videotape will be announced in this mailing at year-end that will give you a general overview of the program. For further program specifics, contact your Area or Regional Service and Support Manager.

apple computer

CORRECTION TO A SEPTEMBER
SERVICE AND SUPPORT NOTICE :

512K MACINTOSH

SECTION F. WARRANTY AND APPLECARE

AppleCare Carry-In Service Part Number was incorrect.

The correct AppleCare Carry-In Service Part Number is:

SC70033 Macintosh 512K $72.00 (Dealer Cost)

apple computer

SERVICE AND SUPPORT NOTICE

MACTEST 3.4 AVAILABLE NOW!

MacTest 3.4 is now available and replaces MacTest 1.0. MacTest 3.4 includes all the benefits of MacTest 1.0, plus the additional features listed below.

A. **FEATURES**

AUTOMATIC-RUN TEST - this feature provides the user with a capability which will continuously test the main logic board and internal drive until a failure occurs or it is manually stopped.

128K or 512K MEMORY TEST - upon insertion of MacTest 3.4 the memory configuration of the system appears in the menu, whether it be 128K or 512K. The current MacTest 1.0 does NOT test the additional memory in the 512K systems.

B. **SERVICE AND SUPPORT**

Technical procedures (Reference: D. Disposition) describe in a step by step manner how to set up, run and interpret the tests being run. MacTest Back-up instructions have also been included to provide you the ability of maintaining a golden MacTest diskette.

C. **ORDERING PARTS**

MacTest 3.4 can be ordered under the P/N 077-8126 at the new price of $15.00.

D. **DISPOSITION**

The Technical Procedures are included in this Mailing.

apple computer

SERVICE AND SUPPORT NOTICE

NEW APPLECARE FORMS AND POLICIES

Apple Service and Support has improved the AppleCare Registration Form.

The new form will be easier for sales people to use. It will also support the recent improvements we've made to AppleCare (i.e., multi-year and multi-system agreements) announced in the August 15 Service and Support Mailing. The new AppleCare Form is now available at your Apple Regional Support Center (Part Number A2F0213).

On the new form you will notice that we've removed the "Add-on Agreement" section. In order to eliminate this somewhat cumbersome "add-on" procedure, we've made two policy changes:

* Dealers can now sell less than 12 months of AppleCare on a single Agreement.

  This will allow customers to buy AppleCare coverage on peripherals purchased after their original system purchase.

* It is no longer necessary to include a CPU on each AppleCare Agreement. Dealers can sell AppleCare on any designated Apple product, regardless if a CPU is covered.

  This change will facilitate those special situations where a customer requires AppleCare coverage for less than an entire year.

apple computer

APPLE SERVICE
LEVEL 1
TECHNICAL PROCEDURES
(P/N 072-0062)

DOCUMENT CONTROL SHEET OCTOBER 1984

FILING INSTRUCTIONS

TAB	REMOVE	INSERT	PAGE NUMBER
Volume I Contents	X	X	two pages
Macintosh	X	X	0.1 - 0.2
	X	X	2.1 - 2.13
Volume II Contents	X	X	two pages
Volume III Contents	X	X	two pages
AppleColor Monitor 100		X	entire procedure

apple computer

TECHNICAL PROCEDURES MANUAL

October, 1984 Edition

TABLE OF CONTENTS - VOLUME I

3 Introductory pages	
--title page	no date
--Apple Tech Resources	no date
--Dealer Tech Support Lines	no date
Apple II	
--Table of Contents	9/09/82
--Take Apart	9/07/82
--Diagnostics	9/07/82
--Troubleshooting	9/09/82
Apple ///	
--Table of Contents	8/30/83
--Take Apart	9/02/82
(except pages 1.14-1.17)	8/30/83
--Diagnostics	11/19/82
(except page 2.7)	5/10/83
(except pages 2.8, 2.10)	8/30/83
--Troubleshooting	9/09/82
(except pages 3.5-3.6)	8/30/82
--Modifications	12/23/82
(except pages 4.5-4.7)	8/30/83
--Apple /// Plus Diagnostics	8/30/83
Apple //e	
--Table of Contents	5/84
--Introduction	10/30/83
--Take Apart	9/21/82
(except pages 1.4, 1.8, 1.10)	10/30/83
--Diagnostics	5/24/83
(except pages 2.2, 2.4)	10/30/83
--Troubleshooting	7/20/83
--Appendix A	5/84
	...
Macintosh	
--Table of Contents	10/84
--Take-apart	1/18/84
--Diagnostics	10/84
--Troubleshooting	1/18/84
--Additional Procedures	7/84
--Illustrated Parts List	7/84

apple computer

Apple //c	
--Table of Contents	6/84
--Troubleshooting	4/84
(except TOC and 1.11)	6/84
--Diagnostics	6/84
--Take-apart	6/84
--Parts Diagram and Part Numbers	4/84
--External Cabling and Signal Diagram	7/10/84
Disk II	
--Table of Contents	8/84
--Take Apart	8/31/82
--Adjustments	8/31/82
--Calibration	9/10/82
--Troubleshooting	9/08/82
--Disk][Analog Card	6/84
--Illustrated Parts List	8/84
Disk III	
--Table of Contents	8/84
--Take Apart and Adjustments	3/28/83
--Disk /// Analog Card Repair	7/84
--Illustrated Parts List	8/84
ProFile	
--Data Recovery	4/20/83
--Exchange	4/20/83
Duodisk	
--Table of Contents	8/84
--Technical Procedures	1/84
--Special Repair Procedure for Loose Analog Board	5/84
--Illustrated Parts List	8/84
Disk Drives	
--Table of Contents	6/84
--Drive Acceptance Program	6/84
Macintosh External Drive	6/84

apple computer

MACINTOSH TECHNICAL PROCEDURES

TABLE OF CONTENTS

Section 1. Take-apart

Safety Information.....1.3
Description of Required Tools.....1.4
How To Use The Technical Procedures.....1.5
Remove Cover.....1.7
Remove Power Supply/Sweep Board.....1.11
Remove CRT.....1.15
Replace CRT.....1.17
Replace Power Supply/Sweep Board.....1.17
Yoke Adjustments.....1.19
Video Adjustments.....1.23
Remove Main Logic Board.....1.25
Remove Disk Drive.....1.27
Replace Disk Drive.....1.29
Replace Main Logic Board.....1.29
Replace Cover.....1.29

Section 2. Diagnostics

Introduction.....2.3
MacTest Back-up Procedures.....2.3
MacTest - Level 1.....2.6
  Equipment Required.....2.6
  Standard Test Procedure.....2.6
  Customized Test.....2.9
  Automatic Run Test.....2.10
  MacTest Repair Procedures.....2.12
  Stopping MacTest.....2.13

Section 3. Troubleshooting

Symptom/Corrective Action Chart.....3.2

©Apple Computer, Inc., 1984.
No part of this document may be reproduced in any form without the written permission of Apple Computer, Inc.

Apple and the Apple logo are registered trademarks of Apple Computer, Inc.

apple computer

Section 4. Additional Procedures

Removing CRT Overspray.....4.3

Section 5. Illustrated Parts List

Main Housing.....5.3
Main Housing.....5.3
Main Housing.....5.5
Keyboard Assembly.....5.7
Numeric Keyboard Assembly.....5.7
External Macintosh Drive.....5.7

apple computer

Macintosh Technical Procedures

Section 2

Diagnostics

Contents:

Introduction.....2.3
MacTest Backup Procedures.....2.3
MacTest - Level 1.....2.6
  Equipment Required.....2.6
  Standard Test Procedure.....2.6
  Customized Test.....2.9
  Automatic Run Test.....2.10
  MacTest Repair Procedures.....2.12
  Stopping MacTest.....2.13

apple computer

Introduction

This section describes general procedures for using the MacTest diskette to test the Macintosh Logic board and disk drives. MacTest consists of a pass/fail diagnostic test, which indicates the area being tested and the kind of test being performed when a failure occurs.

To make a backup copy and use the diagnostic diskette you must know how to "pull down" menus and select options using the mouse. If you do not already know how to do this, refer to the "Macintosh Owners Guide."

Before using MacTest make a backup copy of the MacTest diskette using the four-pass, one-drive copy program and the MacTest backup procedures. When testing a defective Macintosh it is possible for the defective module to erase and/or damage a section of the MacTest diskette.

MacTest Back Up Procedures

The four-pass, one-drive copy program has been included on the golden MacTest diskette in order to back up the diskette **before** testing damaged systems.

NOTE: A two drive copy **will only be successful if the "Utilites" copy program is used.** This file is available on the first release Macintosh Test diskette.

The steps which follow allow the user to:

1) Move the **Disk Copy** file from the golden MacTest diskette onto a standard diskette using one drive.

2) Repair the MacTest boot-up configuration that may be changed by moving that file.

3) Use the **Disk Copy** program on the standard diskette, back up the golden MacTest diskette.

   NOTE: Copy MacTest onto a diskette that you will use only for MacTest. The golden MacTest diskette has reserved tracks for the drive tests. If you copy the MacTest file onto a standard Macintosh diskette and then run the tests, you may write over other existing data on the diskette and damage the information stored.

1. Insert a standard Macintosh diskette that will boot to the desktop (Paint/Write or System Disk). Power on.

   NOTE : To open a diskette or a file icon, either click twice on the icon, or highlight it, pull down the file menu and select **Open.**

2. Open the diskette icon. Check to see if the **DiskCopy** file is present. If **it is** proceed to step 16. If it **is not** continue to step 3.

   IMPORTANT: The disk copy icon MUST be the one specified in Figure 1 by YES. The copy program signified by two overlapping disks will not function on a 512K machine.

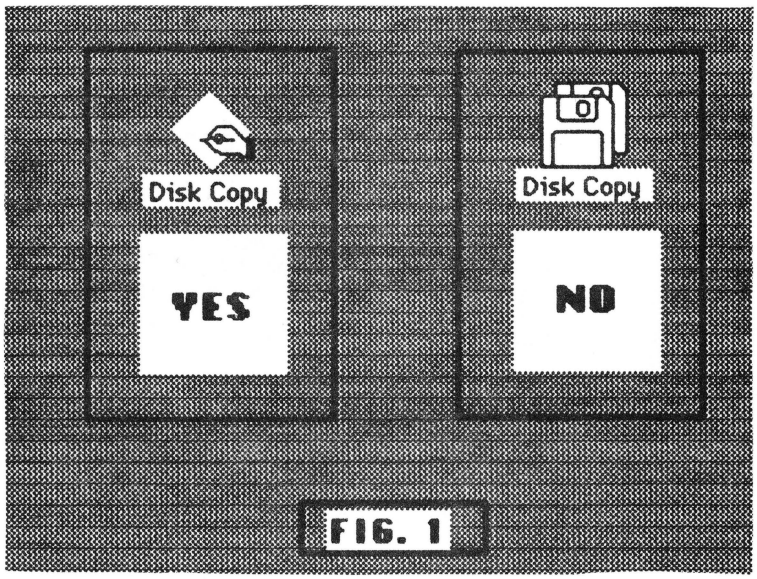

FIG. 1

3. **Close** and **Eject** the diskette.

   NOTE: Close the diskette by clicking in the small box in the upper left hand corner of the window or by pulling down the **File** menu and selecting **Close.**

   NOTE: Eject the diskette by depressing the Command (the key to the right of the option key) and E keys simultaneously or by pulling down the **File** menu and selecting **Eject.**

4. Insert the golden MacTest diskette. Three file icons will be displayed: **DiskCopy, BootConfig,** and **MacTest.** Click and hold down the mouse button and drag the **DiskCopy** icon to the icon of the standard diskette which is located in the upper right hand corner of the screen.

5. The message "Files remaining to copy 1" will appear at the top of the screen.

6. The Macintosh will then eject the golden MacTest diskette and display a request to insert the standard diskette. Insert the standard diskette. The file copy is complete when the messages disappear.

7. Verify the file transfer by opening the standard diskette and locating the **DiskCopy** icon.

8. **Close** and **Eject** the standard diskette.

9. Insert the golden MacTest diskette.

10. Open the file **BootConfig**, which is on the screen. The top of the window will read "Boot Blocks Version 1.1." At the left of the screen will be a list of ten features accompanied by ten rectangular boxes containing short statements.

11. Locate the rectangular box directly to the right of the statement "Initial file to run." Verify that the statement in the box is "MacTest."

    NOTE: If it DOES NOT show the statement "MacTest" perform the MacTest Repair Procedure found on pg. 12 of this section starting with step 3, before continuing with the next step. This is to ensure that the MacTest diskette is properly configured before copying.

12. Click in the **Quit** box to return to the desktop.

13. **Eject** the golden MacTest diskette.

14. Power off or push the reset switch which is located on the left hand side of the Macintosh to the lower rear.

15. Insert the standard diskette with the **DiskCopy**.

16. Open the disk. Open the **DiskCopy** icon. Single drive copy information will appear.

17. Click in the **OK** box. The standard diskette will be automatically ejected.

    NOTE : The **original** diskette is the golden MacTest diskette. The **destination** diskette is a blank or a diskette you wish to copy over.

18. The message "Please insert the disk you want copied" will appear at the bottom of the screen. Insert the golden MacTest diskette. After reading, the diskette will be ejected.

19. The message "Please insert the destination diskette" will appear. Insert a blank or a diskette you wish to copy over. If the diskette has information on it the message "Destroy 'Name of' disk?" Click **OK** to continue. After writing and verifying it will be ejected.

20. The message "Please reinsert the original disk" will appear. Insert the golden MacTest diskette.

21. Steps 19 and 20 will be repeated 3 more times.

22. The message "Your disk has been successfully copied" will appear when finished. Click in the **OK** box.

    NOTE: At this point if you wish to make additional backup copies, click in the **OK** box to continue and return to step 19.

23. Click in the **Quit** box. The message to insert your standard diskette will be displayed. Insert it.

24. **Eject** the standard diskette.

25. Power off.

26. You now have a backup of the MacTest diskette. To verify the copy, proceed to **MacTest - Level 1.**

MacTest - Level 1

The MacTest diskette is used to identify module failures of the main logic board, keyboard, keypad, and disk drives on both the 128K and 512K Macintosh. If you cannot boot the diskette, check the power cable and internal cable connections first. If cables are secure, replace the modules specified for the problem you are experiencing in Section 3 and attempt to boot the diskette after each module swap to verify the cause of the problem.

Replace modules when indicated by test results. Verify that the problem has been corrected by re-testing with the diagnostic diskette. If the correct operation is still not obtained, turn to the troubleshooting section and follow its instructions.

The MacTest diskette contains three automatic tests, a video alignment grid, a sound test and tests for the keyboard and keypad. You can run a Standard Test, which checks the logic board, keyboard, keypad, sound, and internal drive; a Customized Test, which tests one module or any combination of modules, including an external drive; or an Automatic-Run Test that will continuously test the main logic board and internal drive until a failure occurs or it is manually stopped.

NOTE: Testing the Logic and the Internal Drive on the 128K Macintosh will take about two minutes; the 512K Macintosh will take about eight minutes. Both will reboot, highlight the "PASS" icon box, and display a logic board "happy face" icon. When a bad module is detected, it will be indicated by a "sad face" icon of the module and a highlighted "fail" box.

NOTE: The video alignment grid is optional and may be used when performing yoke and video adjustments.

Equipment Required:

MacTest diagnostic diskette, Rev. 3.4 (PN# 077-0126B)
Loopback connectors (2) (PN# 077-8129)

Standard Test Procedure:

1. Install two loopback connectors on the two serial port connectors on the rear of the Macintosh.

2. Turn on the Macintosh. You should hear a tone and then see an icon of a diskette with a flashing question mark.

3. Insert the "MacTest" diagnostic diskette into the internal drive. After 20 to 30 seconds you should see a screen titled **MAC Confidence Test.** The amount of memory in the machine will be displayed in the Menu Bar as **128K** or **512K 512K 512K 512K.**

   NOTE: If the **MAC Confidence Test** window does not appear and a screen with disk and file icons appears, see the MacTest repair procedures.

   If none of the described conditions occur, use the symptom table in the troubleshooting procedures (Section 3) to isolate the fault.

4. When the **MAC Confidence Test** window appears, click the START icon box. MacTest will start and run the Main Logic Board and Internal Drive Tests, automatically.

   While the tests are running, you will see a variety of icons on the display, indicating the type of module being tested.

   NOTE: The Logic 2 test runs approximately 3-4 minutes on a 512K Macintosh. During the test the icon for logic will appear in the test window with the number 2, and the menu bar at the top of the screen will slowly flash from inverse to normal and back.

   If all tests pass, the Macintosh will reboot after a few minutes, momentarily highlight the "PASS" icon box, and display a logic board "happy face" icon. A bad module will be indicated as it is detected by a "sad face" icon of the module. If any test fails, the tests will stop running.

   NOTE: The logic board may be tested without the loopback connectors by selecting **CANCEL** when the message "Verify Serial Loopback Plugs Installed..." appears. This will cancel the tests that exercise the external serial ports. If the loopback plug message appears and the loopback plugs are connected, click **OK.**

5. To test the keyboard, pull down the **Apple** menu at the upper left corner of the screen and select **Key Caps.** Press each key on the keyboard and verify that the display block for that key is highlighted. If the key is not highlighted, it is bad and the keyboard should be replaced.

6. After all the keys have been tested, select the small, square box in the upper left corner of the **Key Caps** window. This will cause the Key Caps window to disappear and the **MAC Confidence Test** window to be displayed.

7. To test the numeric keypad, disconnect the keyboard from the Macintosh and connect it to the numeric keypad. Connect the keypad to the Macintosh.

   NOTE: To ensure that the Macintosh works properly with the keypad attached, perform the Logic Board test, as described above, before continuing with the next step.

8. Pull down the **Apple** menu at the upper left corner of the screen and select **Calculator.** Press each key on the keypad and verify that the display block for that key is highlighted. If the key is not highlighted the keyswitch is bad and the numeric keypad should be replaced.

9. After all the keys have been tested, click the small black square in the upper left corner of the **Calculator** window. This will cause the Calculator window to be replaced by the **MAC Confidence Test** window.

10. To test the sound, pull down the **Apple** menu at the upper left corner of the screen and select **Control Panel.** Use the mouse to select and drag the Sliding volume control knob, at the far left side of the control panel window, to each of the numbered settings (starting at 0 and working to 7). If the volume of the speaker tone does not increase with the higher numbers, replace the logic board and mark it "failed sound test". Click in the small box in the upper left hand corner of the window to close the **Control Panel.**

NOTE: The MacTest file has no menu option to eject the diskette. To eject it, execute the following steps:

11. Press and hold down the mouse button.

12. While holding down the mouse button, turn off and then turn on the Macintosh. The MacTest diskette will be ejected and an icon of a disk with a flashing "X" will appear. Any Macintosh diskette may now be inserted.

Customized Test

This procedure is used whenever you wish to test only one module or a different combination of modules than is tested in the Standard Test.

1. If the main logic board is to be tested, install two loopback connectors onto the two serial port connectors on the rear of the Macintosh.

   NOTE: The logic board may be tested without the loopback connectors by selecting **Cancel** when the "Serial LoopBack Plugs?" dialog box appears. This will cancel the tests that exercise the external serial ports. If the "Serial LoopBack Plugs?" dialog box appears and the loopback connectors are connected, click **OK.**

2. Turn on the Macintosh. You should hear a tone and then see an icon of a diskette with a flashing question mark.

3. Insert the "MacTest" diagnostic diskette into the internal disk drive. After 20 to 30 seconds you should see a screen titled **MAC Confidence Test.** The amount of memory in the machine will be displayed in the Menu Bar as **128K** or **512K 512K 512K 512K.**

   NOTE: If the **MAC Confidence Test** window does not appear and a screen with disk and file icons appears, see the MacTest repair procedures.

   If none of the described conditions occur use the symptom table in the troubleshooting procedures (Section 3) to isolate the faulty module. After fixing the problem, return to this section to run the diagnostic test.

4. Pull down the **Select Test** menu (just right of the **Apple** menu) and select **Select Test Module.**

5. A window displaying four possible tests will appear. These tests are a Video Alignment Grid, the Main Logic Board test, the Internal Disk Drive test and the External Disk Drive test. The Main Logic Board and Internal Disk Drive tests are already selected. To de-select a test, click the appropriate box; the "X" will disappear. To select an additional test, click the empty box beside that test. When selections have been completed, click **OK.**

   NOTE: If the Video Alignment Grid is selected, it will appear on the screen before any tests are run. To exit the Video Alignment Grid, click the mouse button.

6. Start tests by clicking the **Start** box. Tests that are selected will run automatically and in the order listed in the Select Test Module window.

NOTE: The MacTest file has no menu option to eject the diskette. To eject it, execute the following steps:

7. Press and hold down the mouse button.

8. While holding down the mouse button, turn off and then turn on the Macintosh. The MacTest diskette will be ejected and an icon of a disk with a flashing "X" will appear. Any Macintosh diskette may now be inserted.

Automatic-Run Test

This procedure is used when you wish to test the main logic board and the internal disk drive continuously or overnight to check for intermittent problems.

1. Install two loopback connectors onto the two serial port connectors on the rear of the Macintosh.

   NOTE: The Serial LoopBack Connectors must be connected to use the Automatic Run feature effectively.

2. Turn on the Macintosh. You should hear a tone and then see an icon of a diskette with a flashing question mark.

3. Insert the "MacTest" diagnostic diskette into the internal disk drive. After 20 to 30 seconds you should see a screen titled **MAC Confidence Test.** The amount of memory in the machine will be displayed in the Menu Bar as **128K** or **512K 512K 512K 512K.**

   NOTE: If the **MAC Confidence Test** window does not appear and a screen with disk and file icons appears, see the MacTest repair procedures. If none of the described conditions occur, use the symptom table in the troubleshooting procedures (Section 3) to isolate the faulty module. After fixing the problem, return to this section to run the diagnostic test.

4. When the **MAC Confidence Test** window appears, pull down the **Options** menu (the last selection on the right side of the menu bar) and select **Make Auto Run Disk.** This will configure the internal files of the MacTest diskette to automatically push the **Start** button after reboot. To de-select the Automatic Run feature, pull down the **Options** menu (the last selection on the right side of the menu bar) and select **UnMake Auto Run Disk.**

   NOTE: The current condition of the Automatic Run feature is indicated by a check-mark to the left of the selected option in the **Options** menu.

5. Click the **Start** icon box. MacTest will start and run the Main Logic Board and Internal Drive tests, automatically.

   While the tests are running, you will see a variety of icons in the display, indicating the type of module being tested.

   If all tests pass, the 128K Macintosh will reboot after about two minutes; the 512K Macintosh will reboot after about eight minutes. Both will highlight the "PASS" icon box and display a logic board "happy face" icon. When a bad module is detected, it will be indicated by a "sad face" icon of the module and the "fail" box will be highlighted.

   NOTE: MacTest will run automatically until a failure occurs. If no failure occurs the tests will run indefinitely. To stop the tests manually, de-select the Automatic run feature by pulling down the **Options** menu and selecting **UnMake Auto Run Disk.** The mouse will respond slowly while the tests are running, so have patience in selecting the menu. The tests will stop after the next reboot cycle.

NOTE : The MacTest file has no menu option to eject the diskette. To eject it, execute the following steps:

6. Press and hold down the mouse button.

7. While holding down the mouse button, turn off and then turn on the Macintosh. The MacTest diskette will be ejected and an icon of a disk with a flashing "X" will appear. Any Macintosh diskette may now be inserted.

MacTest Repair Procedures

It is possible to unintentionally "change" the bootup file by inserting the MacTest diskette into the disk drive immediately after ejecting another Macintosh applications diskette without turning off the system. If this happens the diskette will not automatically start by displaying the Mac Confidence Test window. The following steps are documented to reconstruct the MacTest boot-up feature.

1. After the disk has been inserted and the desktop appears with the icons of the disk and the other files, select and open the file called **BootConfig**.

2. The **BootConfig** window will list ten features at the far left side accompanied by ten rectangular boxes, containing short statements, at the right. Locate the rectangular box directly to the right of the "Initial File to run" statement.

3. If the box says "Finder" or anything other than "MacTest", double click inside the box until the contents are highlighted.

4. Type MacTest into the box, from the keyboard.

5. Click the small box on the far right side marked **Update**.

6. Click the small box on the far right side marked **Quit**. The **BootConfig** window will disappear.

7. **Eject** the MacTest diskette and reboot the system.

Stopping MacTest

The sequence of tests may be stopped by executing the following steps:

1. Use the mouse cursor to pull down the **Select Test** menu. The mouse will respond slowly while tests are running, so have patience in selecting the menu. The mouse button may also respond slowly while tests are running.

2. Select the **Select Test Module** option. The **Select Test Module** window will appear.

3. Click every box with an "X" in it so that all "X's" disappear. This will turn off every test module.

4. Click the **OK** box. MacTest will stop and the "pass" light will be highlighted.

   NOTE: Following this procedure will turn off every test module so that no tests will run. Modules must be turned on by clicking them in the **Select Test Module** window or by re-booting in order to run the tests.

apple computer

TECHNICAL PROCEDURES MANUAL

October, 1984 Edition

TABLE OF CONTENTS - VOLUME II

Silentype	
--Take Apart	9/08/82
--Alignment Procedures	9/08/82
--Diagnostics	9/09/82
--Troubleshooting	9/09/82
--Modifications	9/08/82
Dot Matrix Printer	
--Introduction	11/11/82
--Take Apart	11/11/82
(except pages 2.11-2.14)	4/84
--Troubleshooting	11/11/82
Daisy Wheel Printer	
--Revisions	1/84
--Table of Contents	2/84
(except page 0.3)	7/84
--Basics	1/02/84
--Troubleshooting	12/19/83
--Take Apart	12/19/83
--Print Quality Adjustments	12/20/83
--Preventative Maintenance	12/10/82
(Europe has rev. 1/84, without Revisions page in front)	
--Forms Tractor	12/19/83
--Mechanical Cut Sheet Feeder	2/84
(except pgs. 7.1, 7.13-7.17)	7/84
--Illustrated Parts List	1/09/84
Imagewriter	
--Table of Contents	3/84
--Introduction	8/15/83
--Take-apart	8/15/83
(except pgs. 2.9, 2.13, 2.21, 2.25 2.27, 2.29, 2.31, 2.35)	3/84
--Troubleshooting	8/15/83
--Illustrated Parts List	5/11/84
--15-Inch Take-apart	3/84

apple computer

Scribe

--Table of Contents	8/84
--Basics	7/84
--Take-apart	6/84
(except pgs. 2.1, 2.14-2.16)	8/84
(except Appendix A)	7/84
--Adjustments	7/84
--Troubleshooting	6/84
--Preventive Maintenance	8/84
--Illustrated Parts List	7/84

apple computer

TECHNICAL PROCEDURES MANUAL

October, 1984 Edition

TABLE OF CONTENTS - VOLUME III

Graphics Tablet	
--Table of Contents	8/84
--Apple //e Installation	8/08/83
--Apple][or //Plus Installation	8/08/83
--Troubleshooting	8/08/83
(except 3.1, 3.3, 3.4)	8/84
--RFI Upgrade Procedures	8/84
--Illustrated Parts List	8/84
Keyboards	
--Table of Contents	5/84
--Keyswitch Replacement	9/03/82
--Keyswitches Used on Apple Computers	5/84
--Datanetics Read and File	3/84
Power Supplies	
--Power Supply replacement for Apple][	8/22/83
Numeric Keypad	
--Troubleshooting	12/03/82
--Assembly/Disassembly	12/03/82
Apple Color Plotter	
--Troubleshooting	9/26/83
--Setup and Configuration	9/26/83
--Take-apart	9/26/83
--Exploded Diag. and Parts List	10/03/x3
Modems	
--Table of Contents	7/84
--Troubleshooting and Take-apart	1/30/84
--Illustrated Parts List	7/84
Monitor II	
--Table of Contents	5/84
--General	5/84
--Take-apart	5/84
--Adjustments	5/84
--Troubleshooting	5/84
--Parts List	8/84

apple computer

AppleColor Monitor 100

--Table of Contents	8/84
--General	8/84
--Take-Apart	8/84
--Adjustments	8/84
--Troubleshooting	8/84
--Parts List	8/84

AppleColor
Monitor 100

apple computer

SERVICE AND SUPPORT NOTICE

APPLECOLOR MONITOR 100 AND 80 COLUMN TEXT/COLOR CARD

```
****************************************
*                                      *
*     UPDATE TO AN AUGUST SERVICE      *
*     AND SUPPORT NOTICE:              *
*                                      *
*      APPLECOLOR MONITOR 100 &        *
*      80 COLUMN TEXT/COLOR CARD       *
*                                      *
****************************************
```

The information below supercedes Section F (Disposition) of the August Service and Support Notice on the AppleColor Monitor 100 and 80 Column Text/Color Card:

F. DISPOSITION

(1) The technical procedures are included in the October Technical Procedures Mailing.

(2) PARTS ORDERS MAY BE PLACED IN NOVEMBER FOR DECEMBER DELIVERY.

Until that time all failed units should be treated as whole unit exchanges.

Level I's are to exchange failed units under warranty from their finished goods inventory and return their failed units to their Regional Support Center using the following part number:

665-0261 AppleColor Monitor 100

apple computer

APPLECOLOR MONITOR 100

TECHNICAL PROCEDURES

Table of Contents

Section 1. General

General Information.....1.2
Setting Up the Monitor.....1.5
Safety Precautions.....1.7
Disposing of the Cathode-Ray Tube (CRT).....1.8

Section 2. Take-apart

Removing the Rear Enclosure.....2.3
Replacing the Rear Enclosure.....2.3
Discharging the CRT.....2.5
Removing and Replacing Procedures:
- DB-15 Connector Assembly.....2.7
- Logic Board.....2.9
- Power Supply (P/S) Board.....2.13
- Power Transformer.....2.14
- Tilt Motor.....2.17
- Front Bezel.....2.19
- CRT/Yoke Assembly.....2.21
- Mask.....2.25
- Brightness/Contrast Control Knobs.....2.27
- Brightness/Contrast Control.....2.27
- Green Only Switch.....2.29
- Power Button/Switch...(LED).....2.31
- Tilt Motor Button/Switch.....2.33
- Control Panel Door.....(See Section 5,"Illustrated Parts")
- Tilt Loading Spring....(See Section 5 "Illustrated Parts")

©Apple Computer, Inc., 1984.
No part of this document may be reproduced in any form without the written permission of Apple Computer, Inc.

Apple and the Apple logo are registered trademarks of Apple Computer, Inc.

apple computer

Section 3. Adjustments

Logic Board Adjustments.....3.3
- Introduction.....3.3
- Materials Needed.....3.3
- Set Up Procedure.....3.5
- Evaluating the Video Test.....3.7
- Vertical Adjustments.....3.9
- Horizontal Adjustments.....3.9
- Focus Adjustment.....3.9

Color Adjustments.....3.11
- Color Bar Check.....3.11
- White Balance.....3.11

Section 4. Troubleshooting Guide

Introduction.....4.2

Symptoms:
- No raster.....4.2
- One horizontal line appears.....4.2
- One vertical line appears.....4.2
- Raster deformed abnormally.....4.2
- Abnormal raster with winding or excessive picture fluctuation.....4.3
- Spot remains with monitor off.....4.3
- Brightness range abnormal or picture is flashing.....4.3
- Raster size small picture abnormally bright.....4.3
- No vertical synchronization.....4.3
- Raster not centered.....4.3
- No picture no contrast.....4.3
- Picture/charcters inclined.....4.3
- Picture characters shiver.....4.4
- 15 or more seconds for picture to appear.....4.4
- Picture appears/disappears.....4.4
- Horizontal linearity bad.....4.4
- Vertical linearity bad.....4.4
- Won't focus.....4.4
- Colors not right.....4.4

Section 5. Illustrated Parts List

apple computer

AppleColor Monitor 100 Technical Procedures

Section 1

General

General Information..... ..1.2
Setting Up the Monitor..... ..1.5
Safety Precautions..... .1.7
Disposing of the Cathode-Ray Tube (CRT)..... ..1.8

General Information

The AppleColor Monitor 100 is an accessory product to be used with the Apple®][and /// Personal Computer families. Its state-of-the-art design incorporates the following features:

1. 12" tilting screen.
2. High quality 80-column display.
3. A "GREEN ONLY" switch for systems that output white text.
4. Nonglare, high contrast screen surface.
5. Accurate reproduction of color graphics.

Frequently used controls are located behind a protective door on the front of the monitor, to the right-hand side as you face it; while those controls less frequently used are on the back. Internationally recognized symbols, shown in Figure 1, are used to identify the various controls.

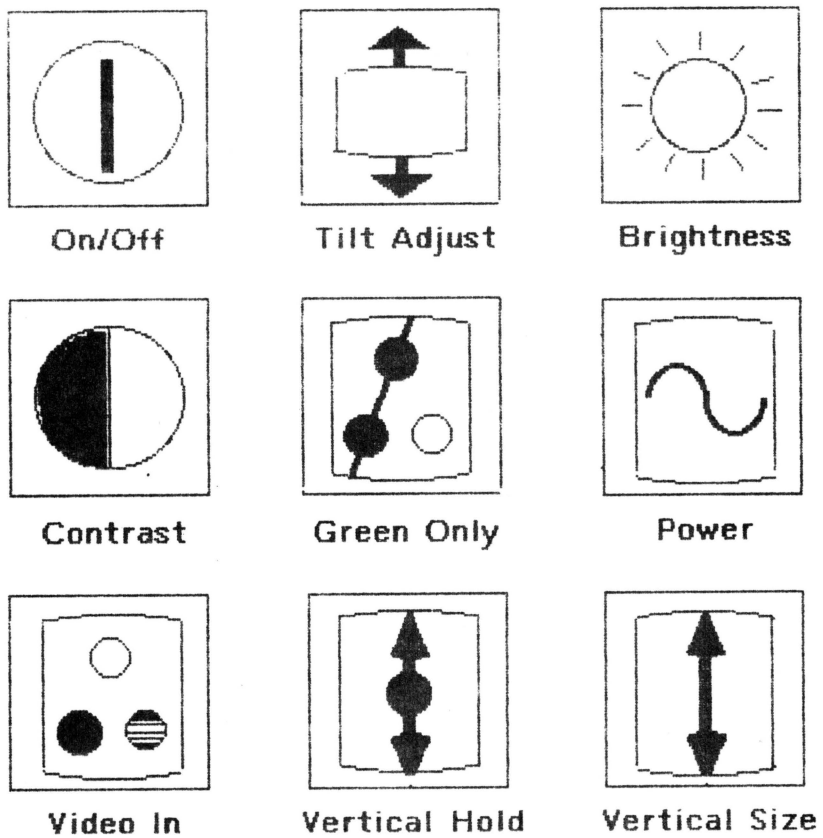

FIGURE 1

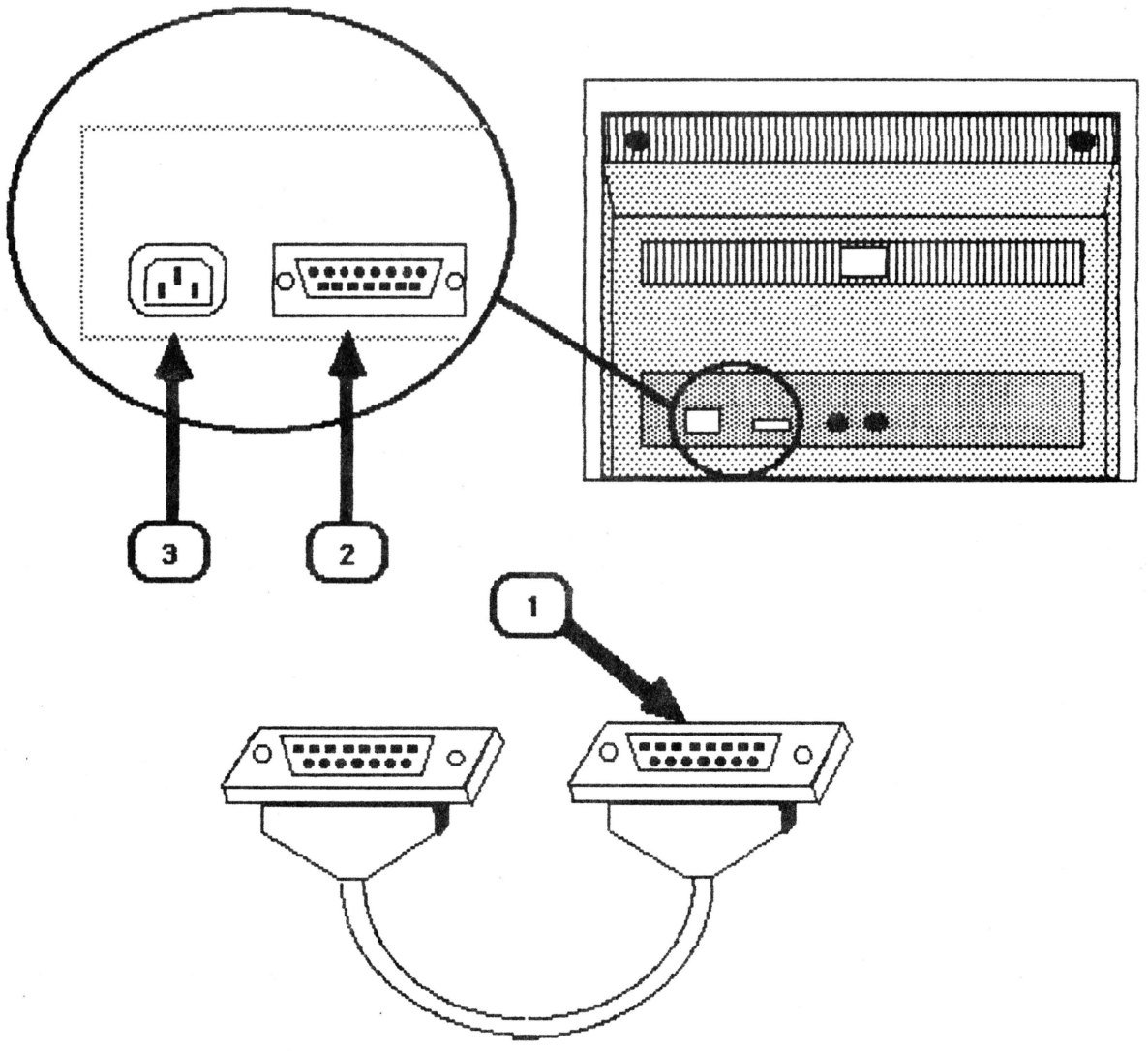

FIGURE 2

Setting Up the Monitor

WARNING: BE SURE THAT THE COMPUTER IS TURNED OFF BEFORE PLUGGING ANY CABLES INTO IT.

1. Turn the monitor so that the back is facing you.

2. Plug either end of the video cable (Figure 2, #1) firmly into the video connector (Figure 2, #2) on the back of the monitor.

3. Fasten the holding screws located at both sides of the connector.

4. Plug the other end of the video cable into the RGB video output connector of your computer.

   The location of the video output connector will depend on which computer you are using. Refer to the Owner's Guide for your system.

5. Connect the AC power cord to the power cord connector (Figure 2, #3) and to the wall outlet.

   CAUTION: THIS EQUIPMENT IS INTENDED TO BE ELECTRICALLY GROUNDED. This product is equipped with a three-wire grounding type plug (a plug having a third pin). This plug will fit only into a grounding type AC outlet. THIS IS A SAFETY FEATURE.

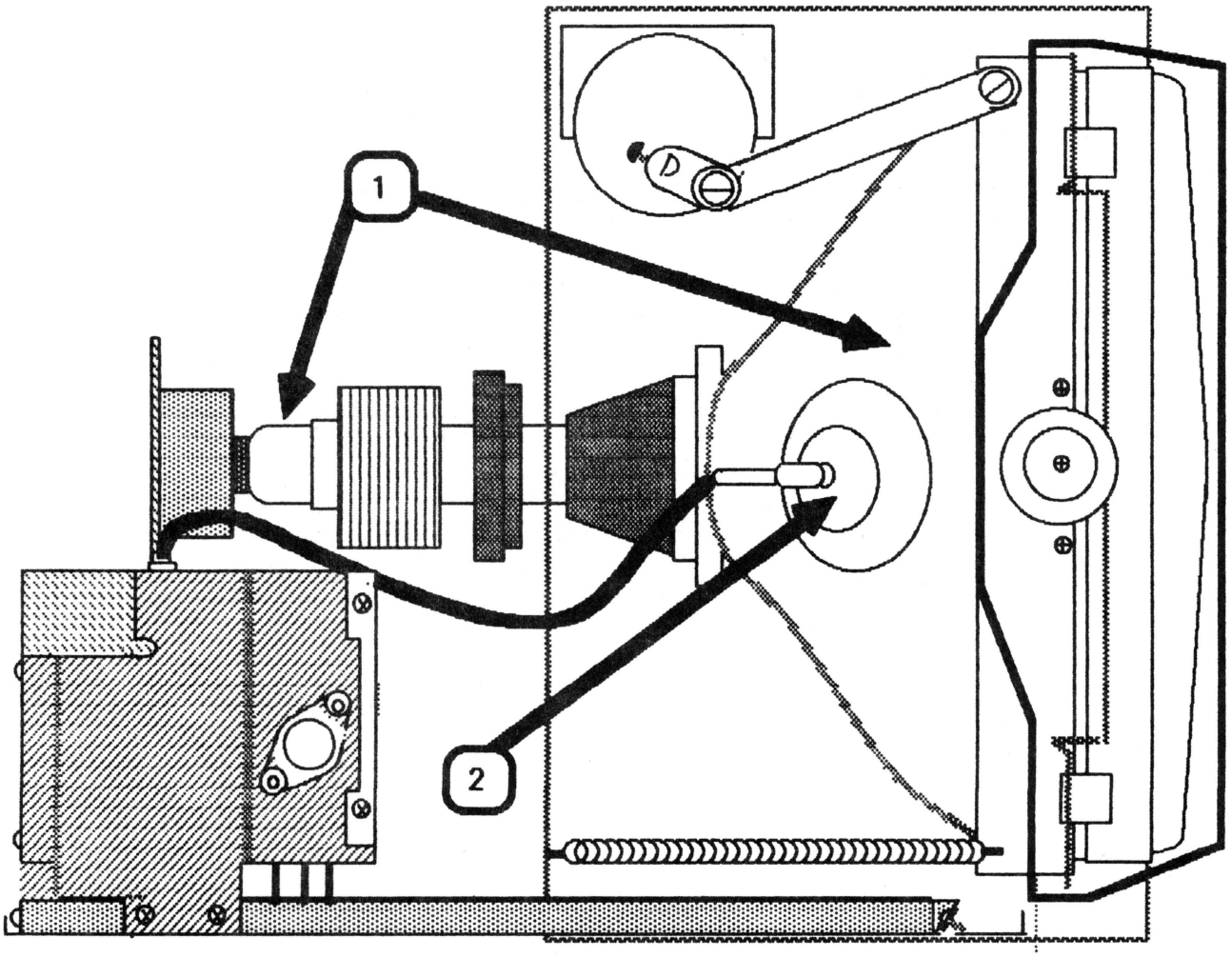

FIGURE 3

SAFETY PRECAUTIONS

1. **EXCEPT WHEN MAKING "LIVE" ADJUSTMENTS, ALWAYS REMOVE THE AC POWER CORD BEFORE WORKING INSIDE THE MONITOR 100.**

2. **ALWAYS DISCHARGE THE CRT BEFORE REMOVING OR REPLACING ANY INTERNAL PARTS.** The CRT, or Cathode-Ray Tube, (Figure 3, #1) is an extremely dangerous piece of equipment. It runs at 24,000 volts DC and contains a high vacuum. Before touching any internal components you must discharge the CRT. (See **Discharging the CRT.**)

3. **ALWAYS WEAR SAFETY GOGGLES WHEN WORKING WITH A CRT.** Aside from electric shock, the most serious danger in working with CRTs is that you may break the tube and cause it to implode. Since the tube contains a high vacuum, a break can cause the tube to collapse into itself violently, then explode. This will not always happen when the tube is broken, but it is always possible, and you must be prepared for the worst case.

4. **NEVER SUBJECT THE TUBE TO MORE THAN MODERATE PRESSURE, AND NEVER HANDLE A TUBE BY ITS NECK.** To prevent an implosion, you should take every precaution against breaking the tube, especially at the neck, where the tube is the thinnest.

5. **ALWAYS REMOVE ALL RINGS, WRISTWATCHES, BRACELETS, ETC., BEFORE WORKING INSIDE THE MONITOR.** Metal jewelry is an excellent conductor of electricity. Removing jewelry will reduce the possibility of electric shock.

6. **NEVER TOUCH THE ANODE.** Normally the anode has a connector (Figure 3, #2) plugged into it, but when a CRT is replaced, this connector is removed, exposing the anode. The anode can maintain a charge of several thousand volts (even after the power is off).

7. **KEEP ONE HAND IN YOUR POCKET OR BEHIND YOUR BACK WHEN ADJUSTING OR DISCHARGING A LIVE CRT.** This reduces the risk of lethal injury should you accidentally contact high voltage.

8. **NEVER USE A GROUNDING WRISTSTRAP WHILE DISCHARGING A MONITOR OR WHILE MAKING ADJUSTMENTS ON A LIVE MONITOR.** A grounding wriststrap is used to protect sensitive components from the damaging effects of electrostatic discharge from your body or clothing. Because a wriststrap is designed to carry a charge, however small, it may safely be used ONLY when working on "dead" (uncharged) equipment.

DISPOSING OF THE CATHODE-RAY TUBE (CRT)

Since the CRT contains a high vacuum, a break can cause the tube to collapse into itself violently, and then explode. So, before you dispose of a defunct CRT, it must be devacuumed. The procedures for devacuuming the AppleColor Monitor 100 CRT are as follows:

1. Put on a pair of safety goggles.

2. Pull off the black plastic guide located at the end of the CRT neck.

3. Use a pair of sharp diagonal cutters to carfully clip off the connector pins from which the plastic guide was removed.

4. Locate a thick cardboard box large enough to completely conceal the CRT.

5. Cut or drill a hole in the side of the box, just large enough to insert the very tip of the CRT neck through. The hole should be about six inches from the bottom.

6. Carefully place the CRT inside the box with the tip of the neck protruding through the hole and tape the box flaps down with a strong tape, preferably duct tape. (Diagram below.)

   WARNING: ONLY THE VERY TIP OF THE CRT NECK SHOULD BE PROTRUDING THROUGH THE HOLE IN THE BOX. THE BOX MUST NOT HAVE ANY OTHER OPENINGS!

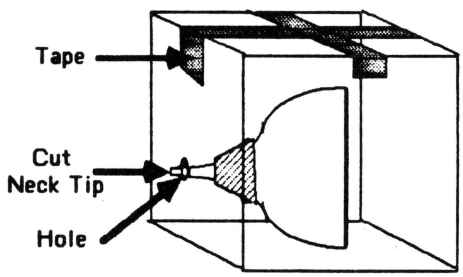

7. Standing to one side, use a pair of diagonal cutters to snip off the very tip of the CRT neck protruding through the hole.

   WARNING: DO NOT LOOK DIRECTLY AT THE BOX WHEN SNIPPING OFF THE NECK TIP!

   You will hear a prolonged sound of air entering the tube (psssssssss...). The CRT is now devacuumed.

apple computer

AppleColor Monitor 100 Technical Procedures

Section 2

Take-Apart

Removing the Rear Enclosure.....2.3
Replacing the Rear Enclosure.....2.3
Discharging the CRT.....2.5
Removing and Replacing Procedures:
- DB-15 Connector Assembly.....2.7
- Logic Board.....2.9
- Power Supply (P/S) Board.....2.14
- Power Transformer.....2.14
- Tilt Motor.....2.17
- Front Bezel.....2.19
- CRT/Yoke Assembly.....2.21
- Mask.....2.25
- Brightness/Contrast Control Knobs.....2.27
- Brightness/Contrast Control.....2.27
- Green Only Switch.....2.29
- Power Button/Switch...(LED).....2.31
- Tilt Motor Button/Switch.....2.33
- Control Panel Door.....(See Section 5,"Illustrated Parts")
- Tilt Loading Spring....(See Section 5 "Illustrated Parts")

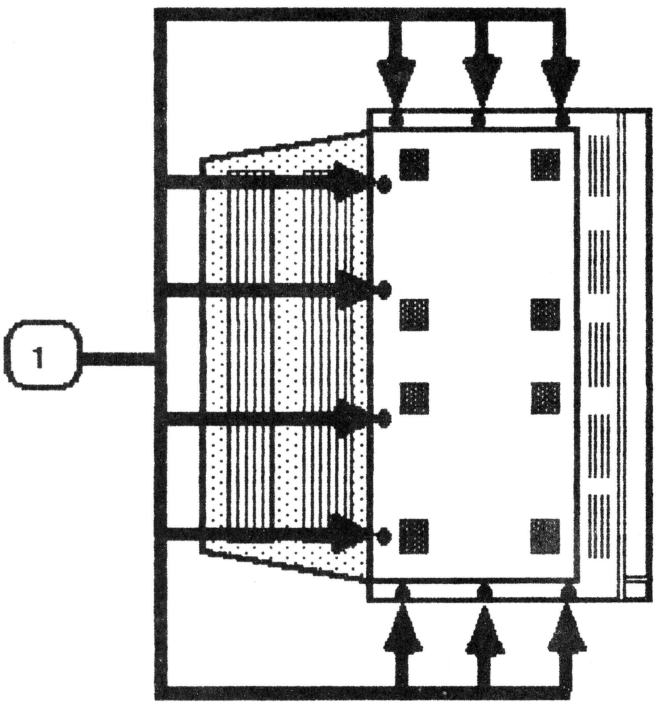

FIGURE 1

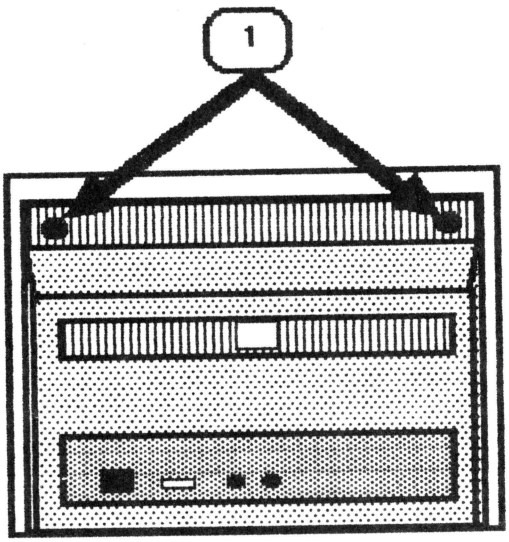

FIGURE 2

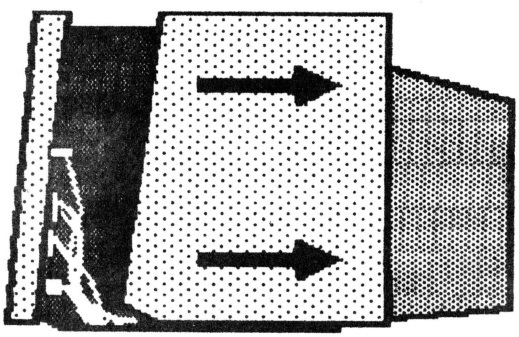

FIGURE 3

Removing the Rear Enclosure

1. Turn the monitor on and use the tilt switch to rotate the screen until it is facing as far down as possible. This will position the CRT neck away from the logic board for easy access to the logic board.

2. Turn the monitor off. Disconnect the AC power cord and the video cable from the back of the monitor.

3. Place the monitor on its right side and turn it so that the bottom is facing you.

4. Remove the ten screws shown in Figure 1, #1.

5. Carefully set the monitor back on its feet with the back facing you, as shown in Figure 2.

6. Remove the two screws shown in Figure 2, #1.

7. Slide the case straight back and away from the monitor (Figure 3). Set it aside.

Replacing the Rear Enclosure

1. Turn the monitor so that the back is facing you.

2. Carefully slide the case forward onto the monitor chassis.

3. Tighten the two screws shown in Figure 2, #1.

4. Carefully set the monitor on its side with the bottom facing you and replace the ten screws shown in Figure 1, #1.

5. Set the monitor upright.

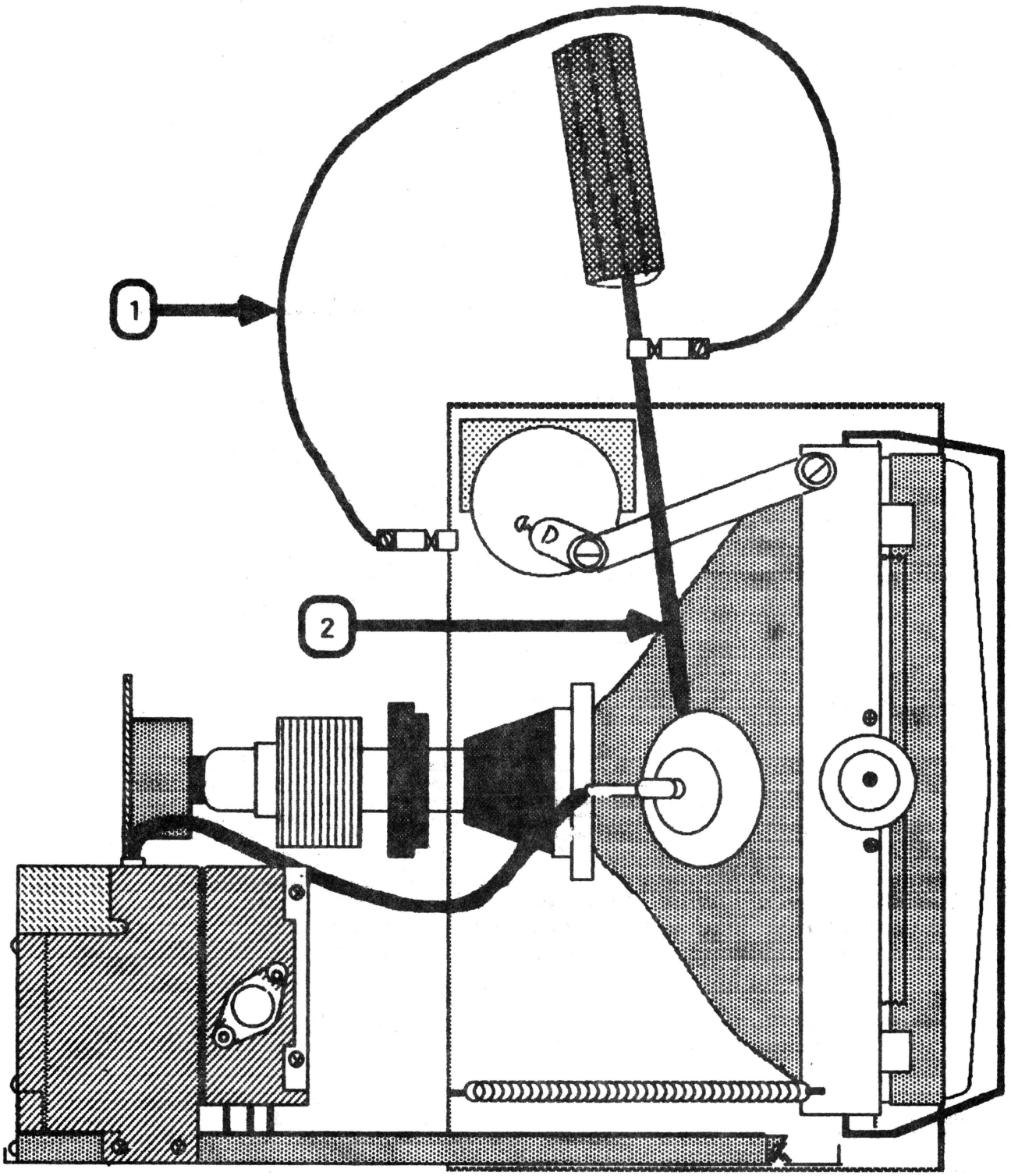

FIGURE 4

DISCHARGING THE CRT

1. Turn off the monitor.

2. Disconnect the AC power cord.

3. Remove the rear enclosure.

4. Position the monitor so that the back is facing you.

5. Remove any rings, wristwatches, bracelets, or grounding wriststraps.

6. Put on safety goggles.

7. Attach one end of an alligator lead to a long flatblade screwdriver, two inches from the insulated handle. Attach the other end to any part of the metal chassis surrounding the CRT. (Figure 4, #1).

   WARNING: USE ONLY ONE HAND WHILE DISCHARGING THE CRT. This is to eliminate any chance of your becoming a path for current should your hand slip and touch the metal part of the screwdriver. Grasp only the insulated handle of the screwdriver while discharging the CRT.

8. Slide the screwdriver under the CRT anode cap (Figure 4, #2) and push it towards the center of the cap until the blade comes into contact with the metal anode ring.

   CAUTION: DO NOT USE FORCE. If it is difficult to get the screwdriver under the anode cap, use a smaller screwdriver to loosen the suction of the anode cap on the tube. Then proceed to discharge the anode with the larger screwdriver.

9. Remove the screwdriver.

10. Remove the alligator clips.

11. Peel back the anode cap until you can see the anode ring at the center. Look at the metal connector in the center of the cap and notice how it is clipped into the CRT. Push on the cap in one direction and lift the cap off the tube.

NOTE: A secondary charge can build up even after you have discharged the CRT. To ensure that any residual charge is dissipated during the service procedure, establish a ground lead by fastening one alligator clip to the metal chassis and the other clip to the edge of the anode aperture.

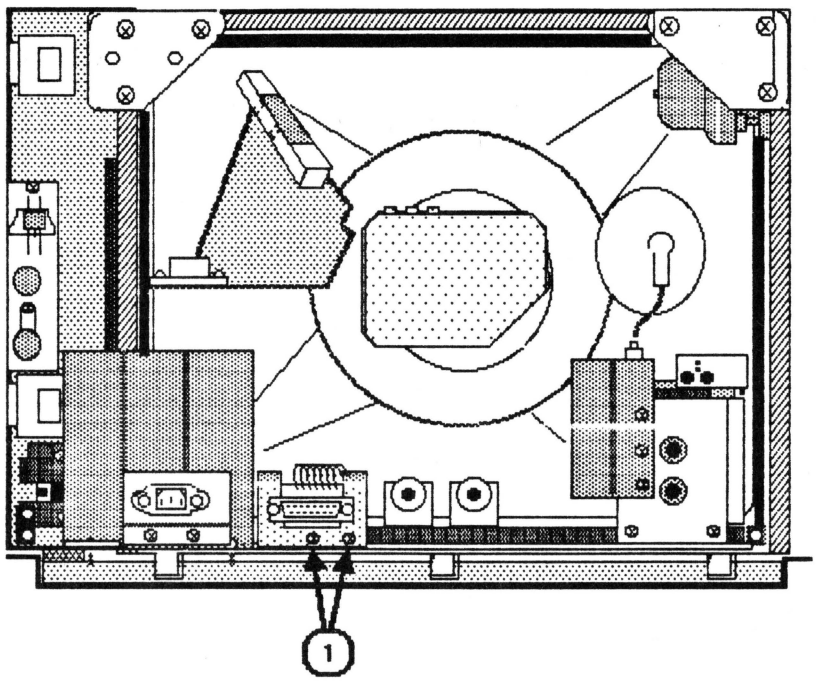

FIGURE 5

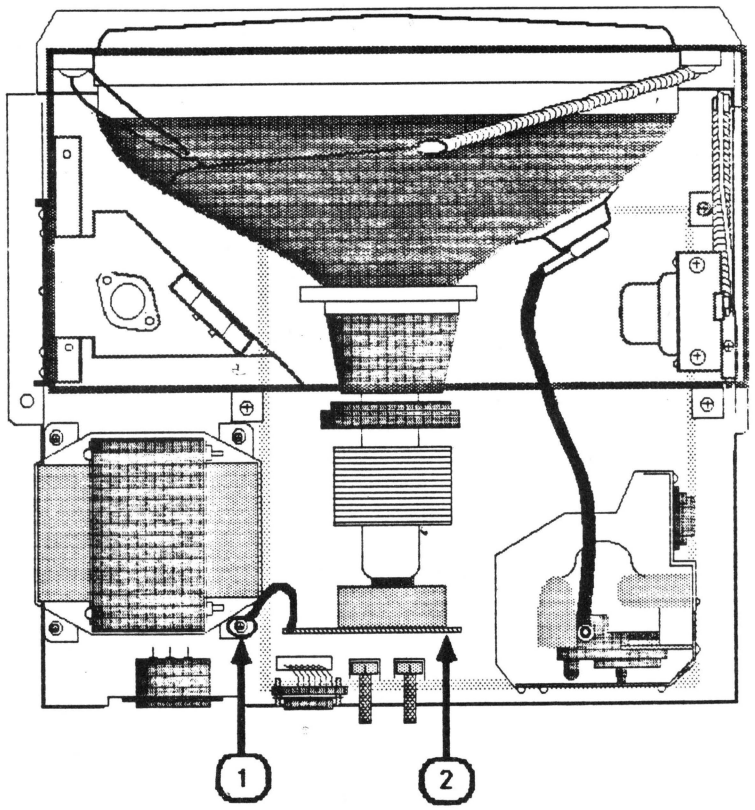

FIGURE 6

Removing the DB-15 Connector Assembly

1. Disconnect the AC power cord.
2. Remove the rear enclosure.
3. Follow steps 4 through 8 of "Discharging the CRT."
4. Disconnect the DB-15 connector, located at the nearest left corner of the logic board.
5. Remove the two Phillips screws (Figure 5, #1), which attach the DB-15 connector assembly to the base plate.

Replacing the DB-15 Connector Assembly

1. Replace the two screws (Figure 5, #1) that attach the DB-15 connector to the base plate.
2. Connect the DB-15 connector to the logic board.
3. Replace the rear enclosure.

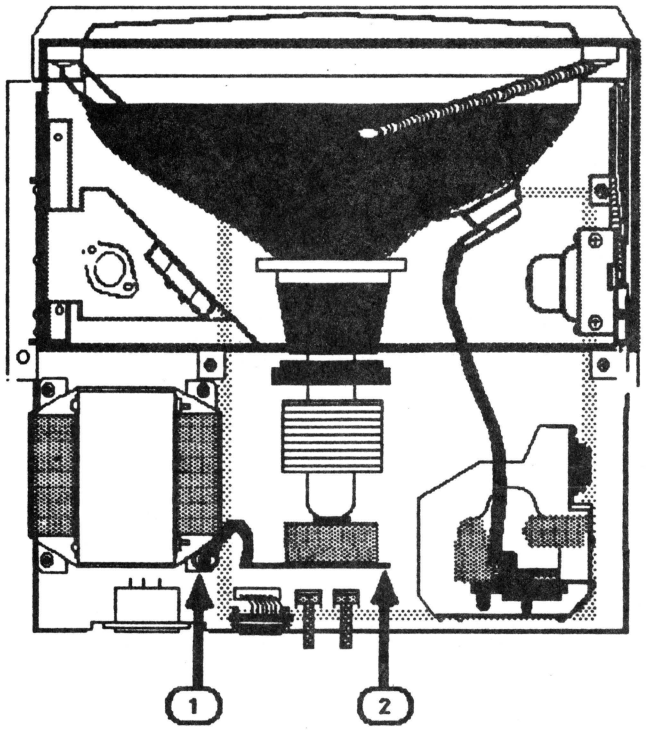

FIGURE 6

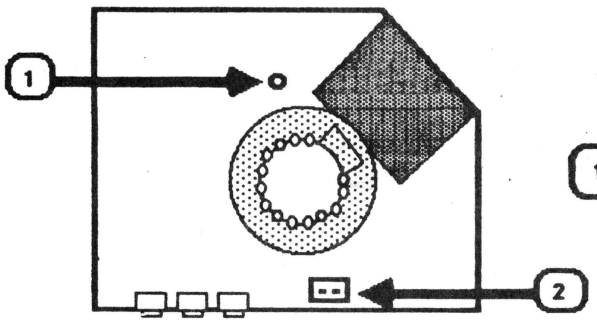

FIGURE 7

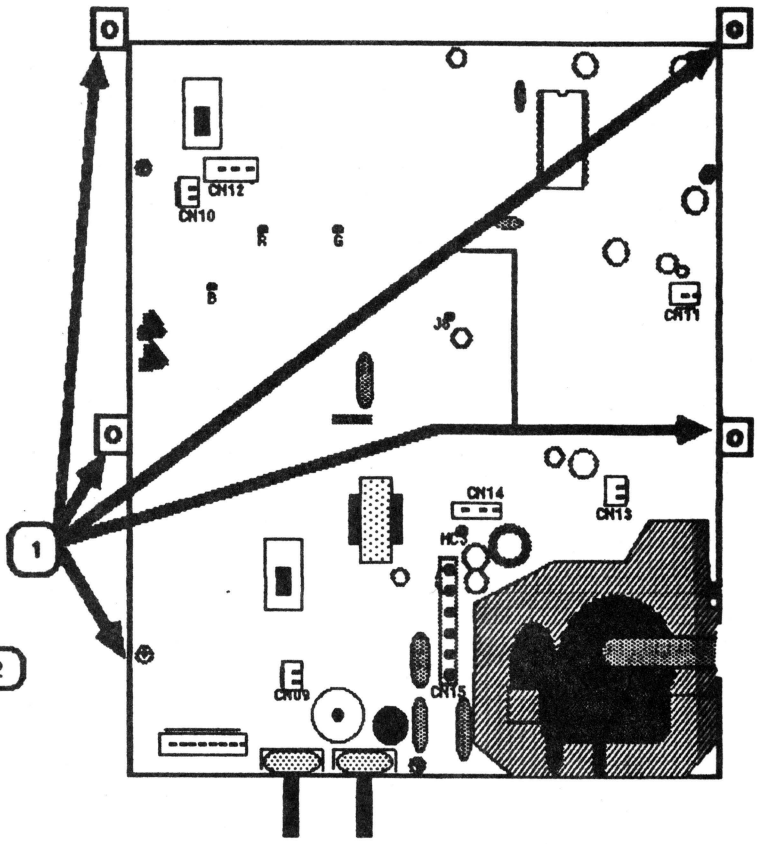

FIGURE 8

Removing the Logic Board

NOTE: The CRT socket board, flyback transformer, and main logic board are all considered parts of one module since they cannot be separated from each other without desoldering components.

1. Disconnect the AC power cord.

2. Remove the rear enclosure.

3. Follow Steps 4 through 8 of "Discharging the CRT."

4. Disconnect the ground strap by removing the power transformer screw shown in Figure 6, #1.

5. Carefully pull the CRT socket board (Figure 6, #2) away from the CRT neck until it barely clears the neck base. Hold the board so that it does not fall free, and tilt it so that the component side is facing up.

   NOTE: For those connectors with tabs, push in on the tabs before pulling the connector off. If connector 15 (CN 15 / logic brd) is difficult to remove, use a small, flatblade screwdriver to pry at both sides of the connector to loosen it before pulling it off.

   CAUTION: DO NOT PULL ON THE WIRES ATTACHED TO THE CONNECTORS WHEN REMOVING THEM.

6. Disconnect the following connectors from the CRT socket board: (Figure 7.)

   a) CN16 (black) -- Figure 7, #1

   b) CN17 (blue and white) -- Figure 7, #2

7. Remove the five Phillips mounting screws shown in Figure 8, #1.

8. Very carefully slide the logic board about halfway out of the chassis.

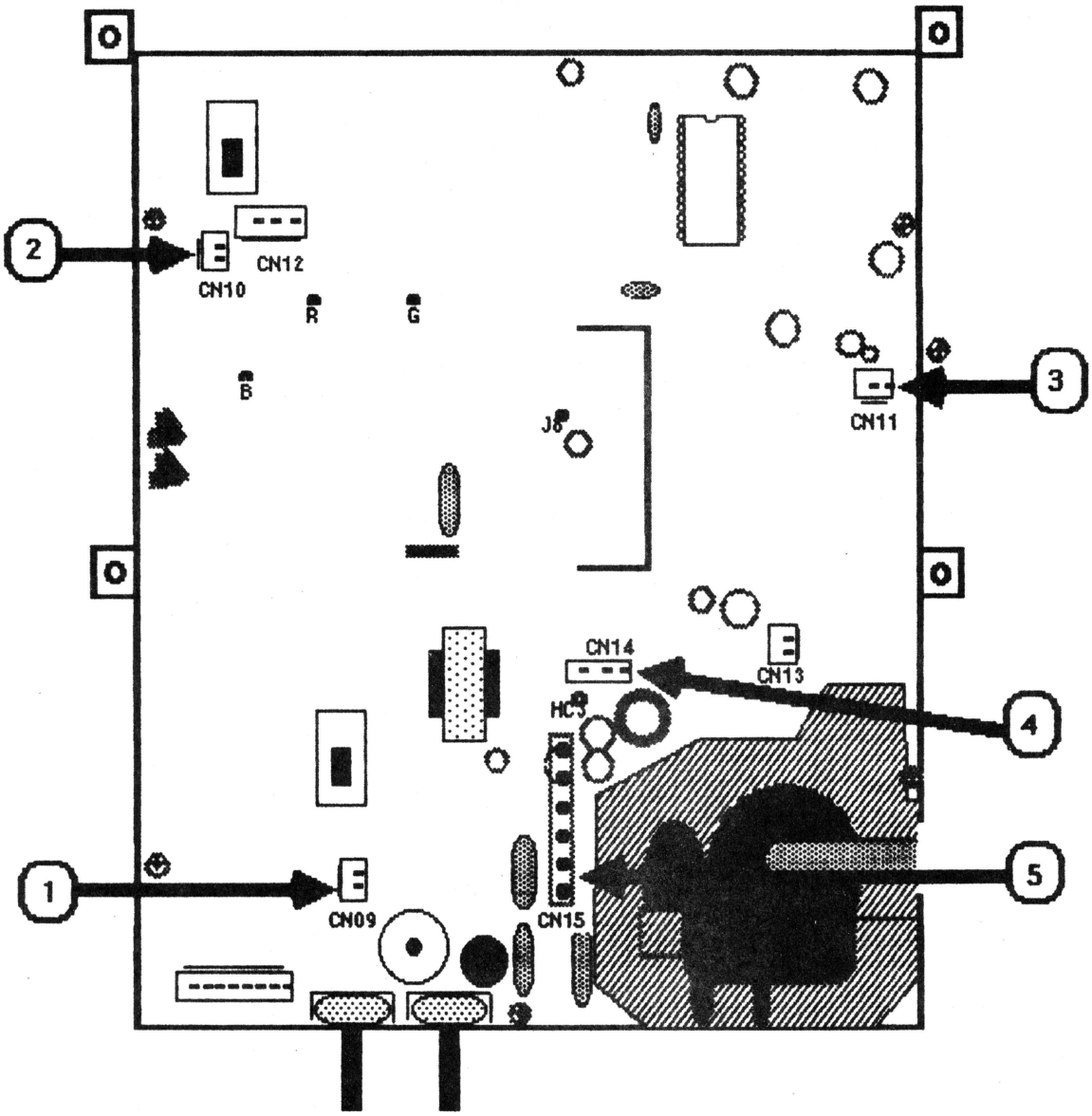

FIGURE 9

8. Disconnect the following connectors from the logic board:

   a) CN09 (pink and green) -- Figure 9, #1

   b) CN10 (blue and black) -- Figure 9, #2

   c) CN11 (red and yellow) -- Figure 9, #3

   d) CN14 (red and black) -- Figure 9, #4

   e) CN15 (red, blue, green, and yellow) -- Figure 9, #5

9. Carefully slide the logic board and the CRT socket board all the way out of the monitor chassis.

Replacing the Logic Board

1. Orient the logic board as it is shown in Figure 9.

2. Slide the logic board about halfway back into the chassis.

3. Connect the connectors listed in step 8 of "Removing the Logic Board" to the logic board.

   CAUTION: Be sure that all the connector wires are placed under the CRT neck!

4. Replace the CRT socket board. It fits only one way.

5. Position the ground strap over the power transformer screw hole from which it was removed and tighten the screw to secure it. (Figure 6, #1.)

6. Replace the five Phillips mounting screws to secure the logic board to the chassis.

7. Connect the connectors listed in step 5 of "Removing the Logic Board" to the CRT socket board.

   CAUTION: Be sure the anode lead is not touching any other components or wires. This is to protect other components should the anode lead insulation wear off.

8. Replace the anode cap.

9. Replace the rear enclosure.

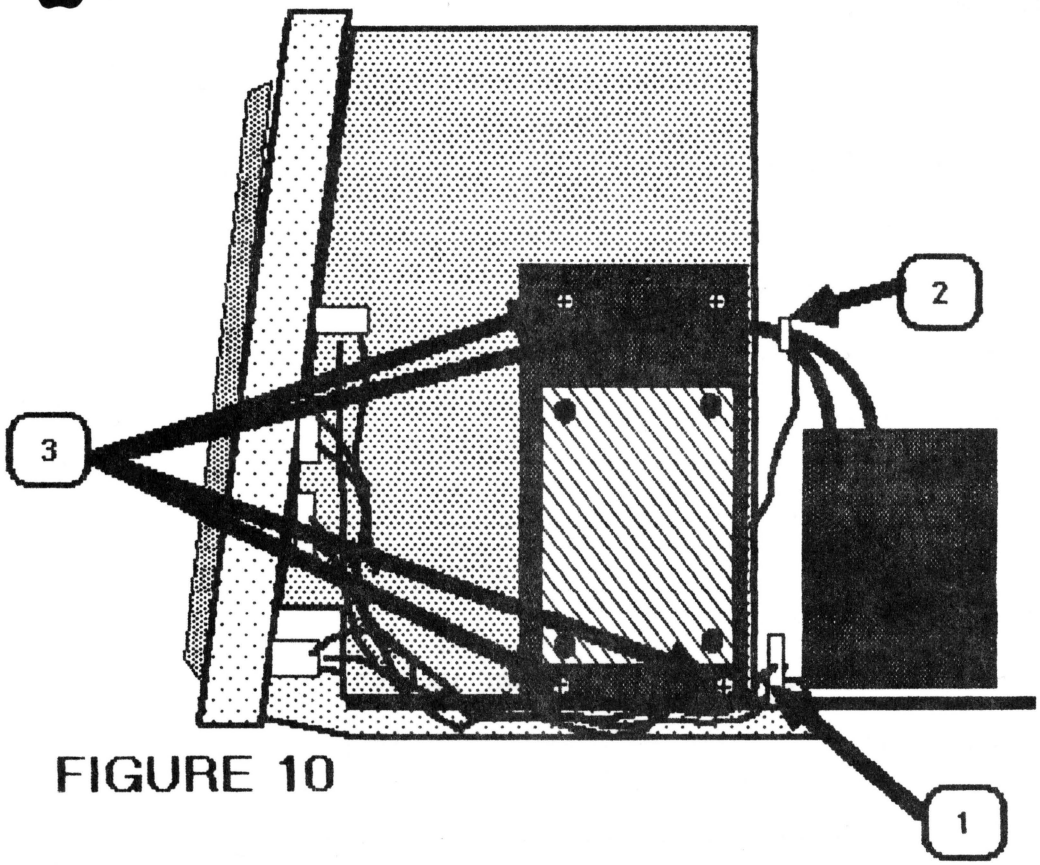

FIGURE 10

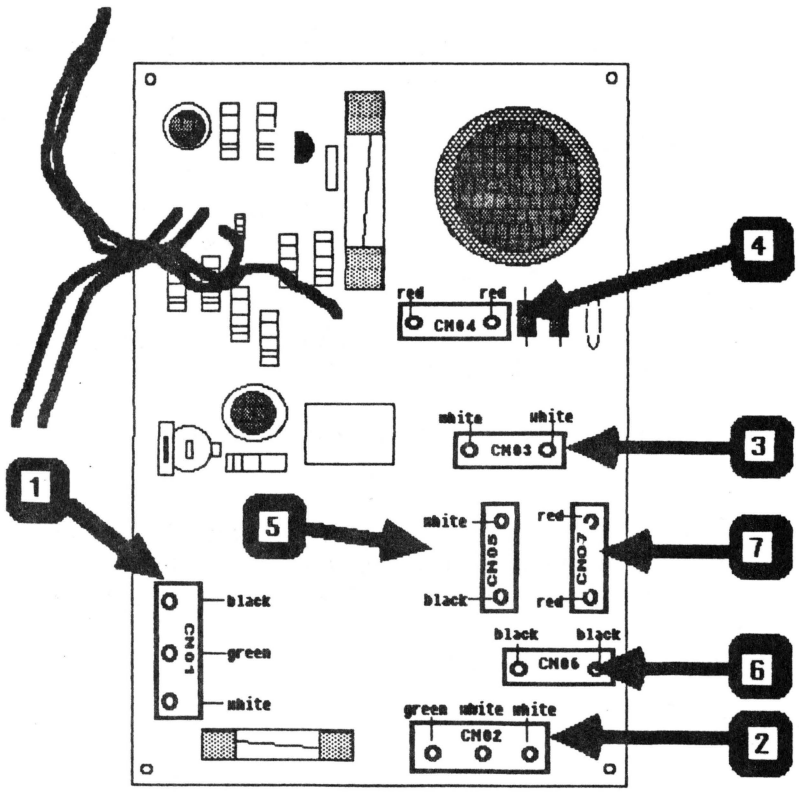

FIGURE 11

Removing the Power Supply (P/S) Board

1. Disconnect the AC power cord.
2. Remove the rear enclosure.
3. Follow steps 4 through 8 of "Discharging the CRT."
4. Disconnect CN14 from the logic board. (Figure 9, #4.)
5. Release the wires from the plastic cable clamp. (Figure 10, #1.)
6. Use a pair of diagonal cutters to cut the cable tie (Figure 10, #2) that holds the power supply wires together.
7. Remove the four Phillips screws from the P/S mounting plate (Figure 10, #3).
8. Tilt the plate slightly forward so that you can see where the connectors are on the component side (inside) of the P/S board (Figure 11).

   NOTE: The connectors are labeled on the solder side of the P/S board.

9. Disconnect the following connectors from the P/S board:

   CAUTION: Do not pull on the wires attached to the connectors when removing them. If any connectors are too hard to remove by hand, pry at the bottom of the connectors with a small screwdriver to loosen them before removing them. BUT BE CAREFUL: JIGGLING THE CONNECTORS TOO HARD WHEN REMOVING THEM MAY BREAK THE TRACES NEAR THE CONNECTOR POLES ON THE SOLDER SIDE OF THE BOARD.

   a) CN01 (black, green, and white) -- Figure 11, #1)

   b) CN02 (green, white, and white) -- Figure 11, #2)

   c) CN03 (white and white) -- Figure 11, #3)

   d) CN04 (red and red) -- Figure 11, #4)

   e) CN07 (red and red) -- Figure 11, #7)

   f) CN05 (white and black) -- Figure 11, #5)

   g) CN06 (black and black) -- Figure 11, #6)

10. Carefully remove the P/S board mounting plate.

Replacing the Power Supply (P/S) Board

NOTE: If you are installing a new power supply board, loosen the screw that mounts the white, rectangular heat sink resistor to the inside of the metal plate (see Diagram A, below). Position the resistor as shown in Diagram B, below and tighten the screw. The power supply board is now ready to be installed.

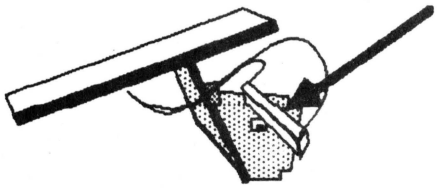

DIAGRAM A

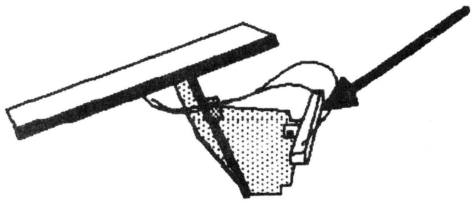

DIAGRAM B

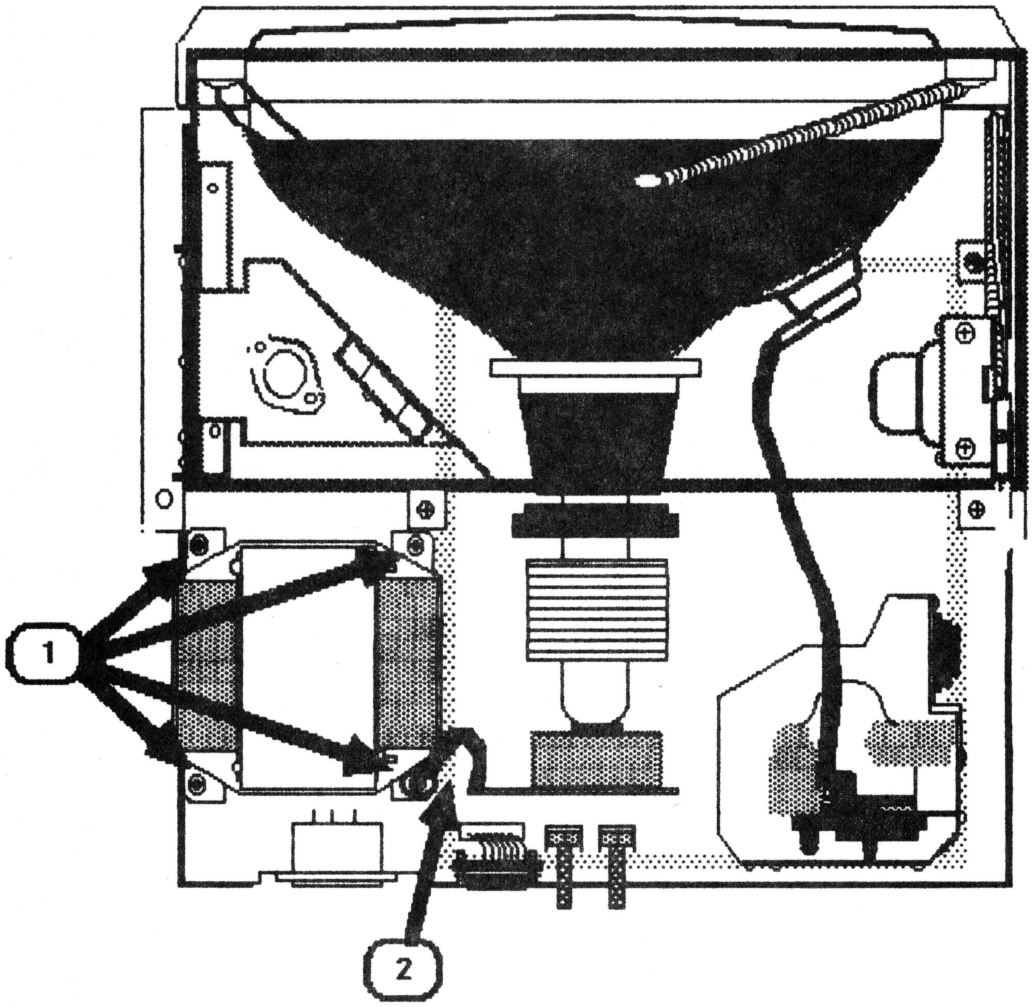

FIGURE12

Replacing the Power Supply (P/S) Board (cont.)

1. Connect CN01 through CN07. **MAKE SURE THAT WIRE COLORS MATCH THE COLORS LISTED NEXT TO THE CONNECTORS AS SHOWN IN FIGURE 11** (see Figure 11, #1 - #7).

2. Connect CN14 to the logic board.

3. Replace the four P/S board mounting plate screws.

4. Set the wires back in the cable clamp from which they were removed (Figure 10, #1).

5. Replace the rear enclosure.

Removing the Power Transformer

1. Disconnect the AC power cord.

2. Remove the rear enclosure.

3. Follow steps 4 through 8 of "Discharging the CRT."

4. Remove the four power transformer mounting screws shown in Figure 12, #1.

5. Move the power transformer over so that you can easily reach the component side of the P/S board.

6. Disconnect CN04 and CN05 (Figure 11) from the component side of the power supply board.

7. Remove the power transformer.

Replacing the Power Transformer

1. Connect the CN04 and CN05 to the power supply board.

2. Place the transformer over its mounting holes with the wires closest to the P/S board. (Figure 12, #1.)

3. Position the ground strap over the proper screw hole (Figure 12, #2) and secure the ground strap by tightening the screw over the strap.

4. Replace the other three screws to secure the power transformer to the monitor chassis.

5. Replace the rear enclosure.

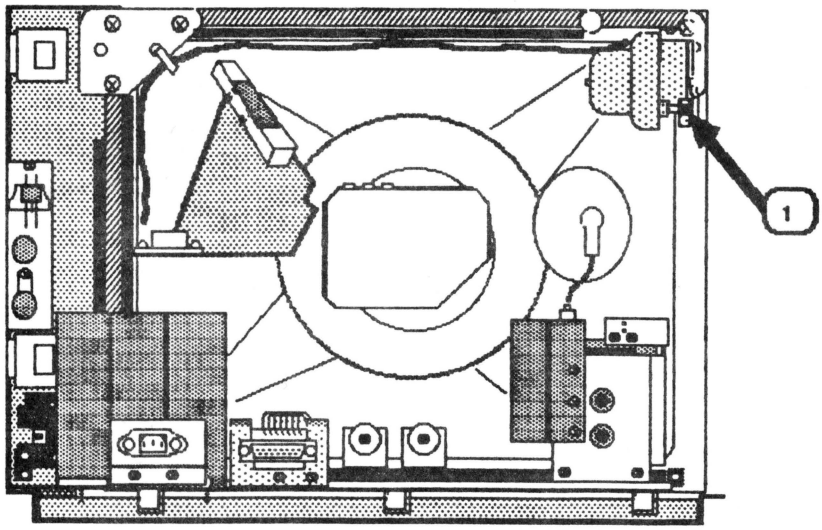

FIGURE 13

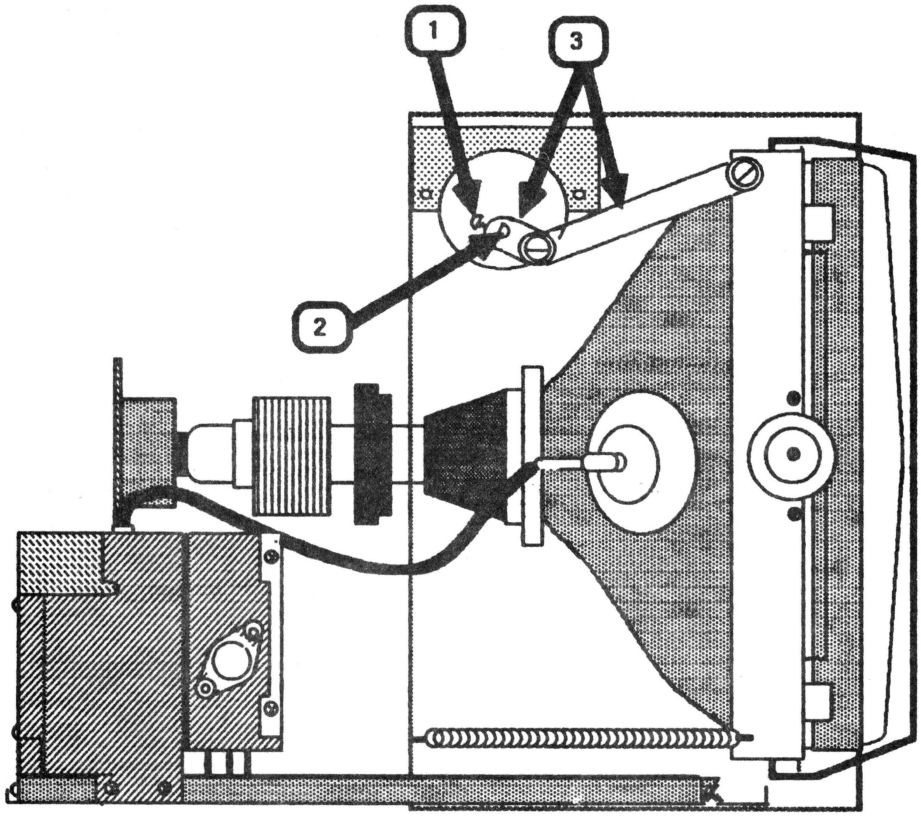

FIGURE 14

Removing the Tilt Motor

1. Remove the AC power cord.

2. Remove the rear enclosure.

3. Follow steps 4 through 8 of "Discharging the CRT."

4. Loosen the motor shaft screw (Figures 13, #1 and 14, #1) until the screw clears the shaft (Figure 14, #2).

5. Follow the two leads from the tilt motor to the power supply board. Cut any cable ties confining the motor wires. These wires are connected to the power supply board by connector 06 (CN06).

6. Disconnect CN06 from the power supply board.

   NOTE: If CN06 is too difficult to remove, follow steps 4 through 8 of "Removing the Power Supply Board." Then perform step 6, above.

7. Use a Phillips stubby screwdriver to remove the two motor bracket screws located on either side of the motor.

8. Slide the motor away from the motor bracket until the shaft clears the motor link assembly (Figure 14, #3).

9. Set the motor aside.

Replacing the Tilt Motor

1. Slide the motor shaft into its fit-through in the motor link assembly (Figure 14, #2).

2. Line up the screw holes on either side of the motor with the motor bracket holes and replace the two Phillips screws.

3. Connect CN06 on the power supply board. Replace the power supply board if you had to remove it to disconnect CN06.

4. Replace the rear enclosure.

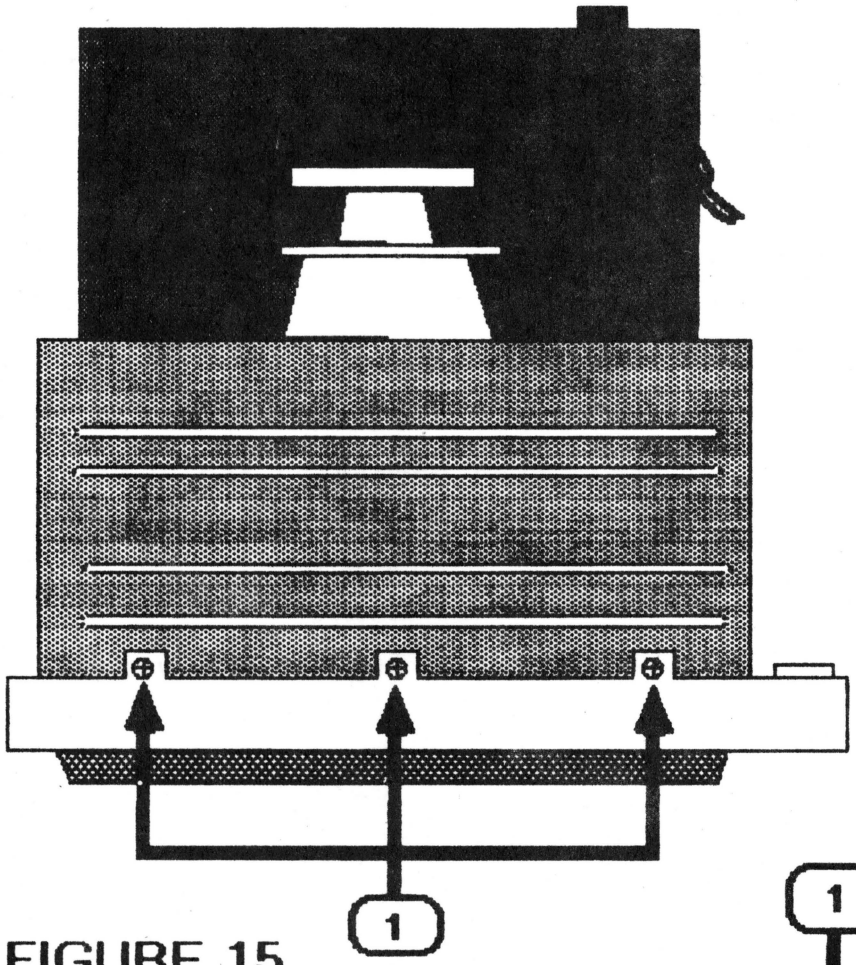

FIGURE 15

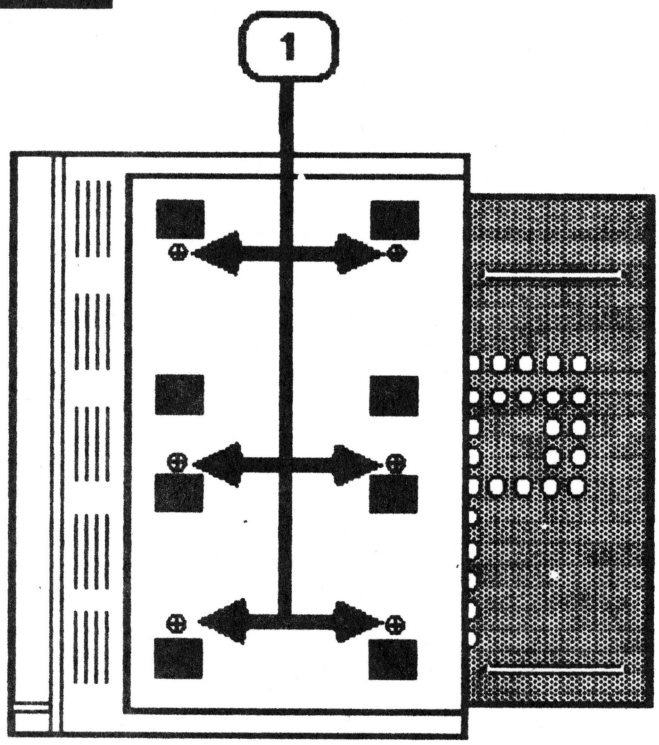

FIGURE 16

Removing the Front Bezel

1. Disconnect the AC power cord.
2. Remove the brightness/contrast control knobs.
3. Remove the rear enclosure.
4. Follow steps 4 through 8 of "Discharging the CRT."
5. Remove the brightness/contrast controls.
6. Remove the power button/switch.
7. Set the monitor on its feet. Figure 15 shows a top view of the monitor. Remove the three screws shown in Figure 15, #1.
8. Carefully place the monitor on its left side and remove the six screws shown in Figure 16, #1.
9. Place the monitor back on its feet.
10. Brace the front panel with one hand. Grasp the metal chassis by the top and lift it slightly off the table while you pull the front panel forward and away from the chassis.

Replacing the Front Bezel

1. Slide the front bezel back onto the metal chassis and replace the three screws at the top.
2. Mount the metal plate (brightness/contrast controls) back onto the front bezel.
3. Mount the plastic plate (On/Off - tilt) back onto the front bezel.
4. Place the monitor on its left side and replace the six mounting screws.
5. Replace the rear enclosure.

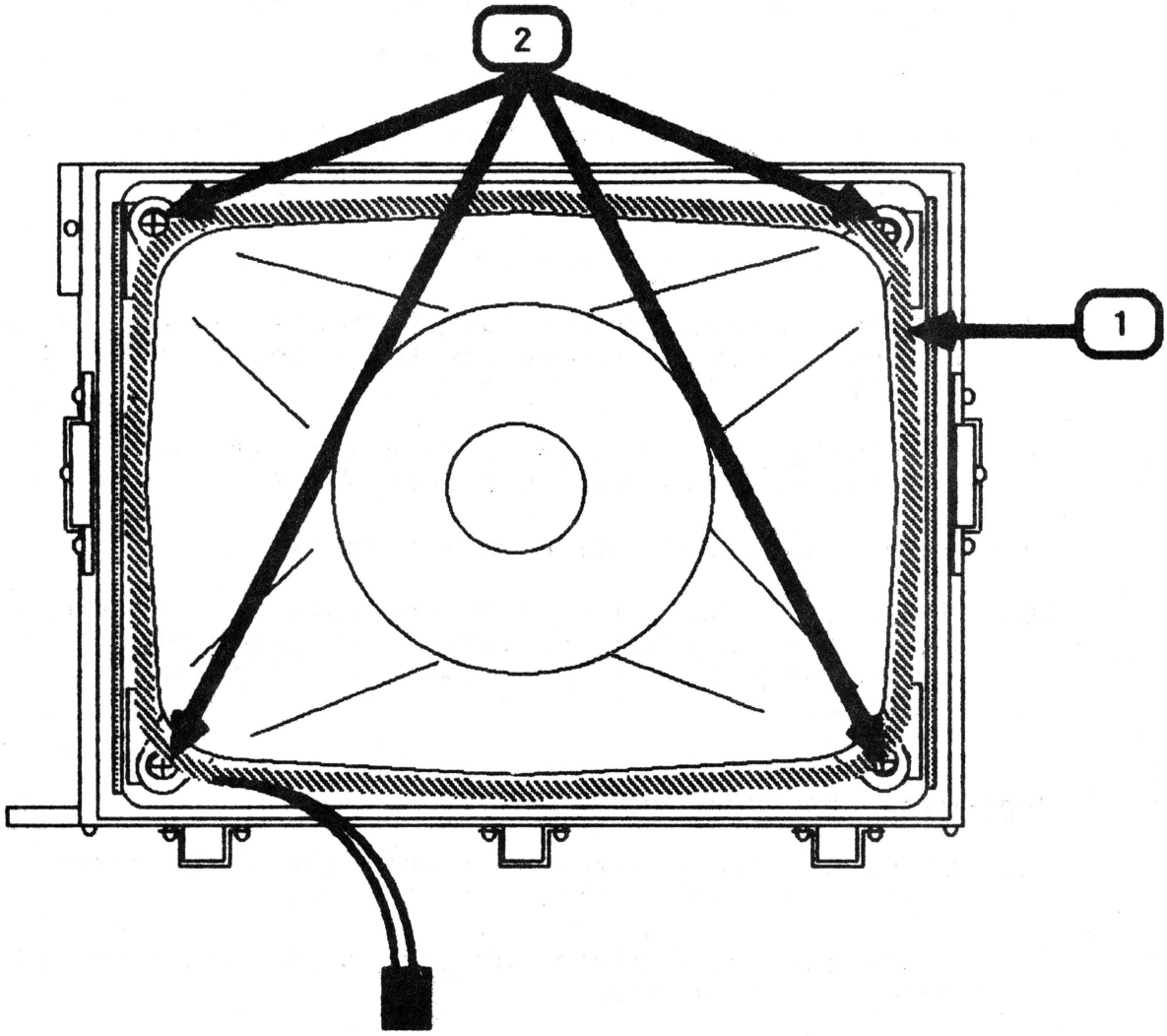

FIGURE 17

Removing the CRT/Yoke Assembly

1. Diconnect the AC power cord.
2. Remove the rear enclosure.
3. Discharge the CRT.
4. Remove the logic board.
5. Remove the power transformer.
6. Remove the power supply board.
7. Remove the tilt motor.
8. Remove the tilt loading spring.
9. Place the monitor face down on a foam pad.
10. Locate the degaussing coil (Figure 17, #1). It is braced to the CRT by plastic coated holding tabs at each corner.
11. Use a pair of needlenose pliers to bend the tabs out to free the degaussing coil.
12. Carefully lift off the degaussing coil and set it aside.
13. Use a long, Phillips screwdriver or a 5/16 nut driver to remove the four CRT mounting screws (Figure 17, #2) and holding tabs. Remove the large washers.
14. Support the CRT with one hand while you set the monitor chassis back on its feet and slide the CRT out of the chassis.

WARNING: IF YOU INTEND TO DISPOSE OF THE CRT, REFER TO "CRT DISPOSAL" IN SECTION 1.

Replacing the CRT/Yoke Assembly

1. Place the monitor face down on a foam pad.
2. Carefully set the CRT back inside the chassis with the wires facing the bottom.
3. Place the holding tabs on the CRT mounting screws. Place the large washer under the holding tabs. (Diagram below.)

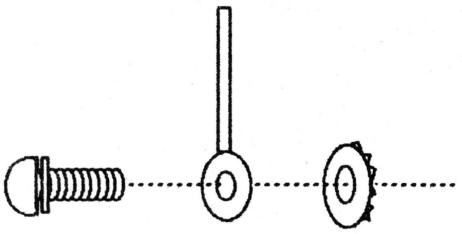

4. Hold the holding tabs in place as you tighten the CRT mounting screws.
5. Orient the degaussing coil so that the connector is at the bottom and place the degaussing coil around the CRT, as close to the front as possible.
6. Bend the holding tab stems around the corners of the degaussing coil to secure the coil to the CRT.
7. Replace the tilt loading spring.
8. Replace the power supply board.
9. Replace the tilt motor.
10. Replace the logic board.
11. Replace the power transformer.
12. Replace the rear enclosure.

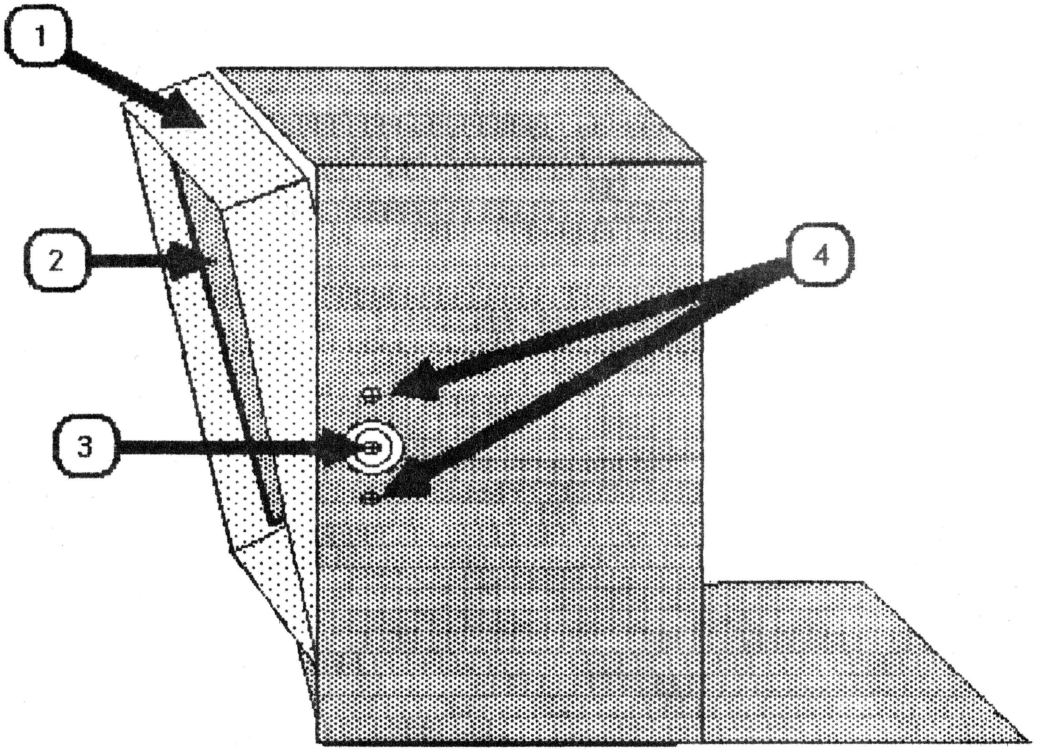

FIGURE 18

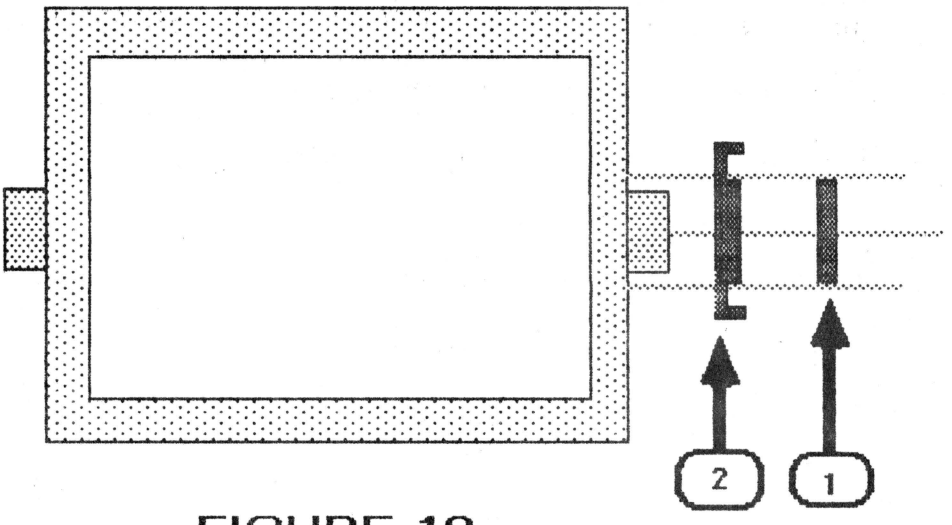

FIGURE 19

Removing the Mask

1. Disconnect the AC power cord.

2. Remove the rear enclosure.

3. Discharge and remove the CRT.

   NOTE: The mask is shown in Figure 18, #1. The metal parts that come off when removing the mask are not considered part of the mask.

4. Follow the instructions below for one side of the mask, and then the other.

   a) Support the CRT bracket (Figure 18, #2) while you loosen the axle screw (Figure 18, #3) until it clears the bracket. Set the bracket aside.

   b) Completely remove the axle screw (Figure 18, #3).

   c) Remove the two screws shown in Figure 18, #4.

5. Pull the mask forward and out of the monitor chassis.

6. Remove the metal ring (Figure 19, #1) and bracket (Figure 19, #2) from the mask axles on both sides of the mask.

Replacing the Mask

1. Place the metal brackets (Figure 19, #2) and rings (Figure 19, #1) back onto both mask axles.

2. Hold the brackets and rings in place as you slide the mask back into the chassis.

3. Follow these instructions for both sides of the mask:

   a) Replace the two screws shown in Figure 18, #4.

   b) Place the CRT bracket (Figure 18, #2) inside the mask with the screw holes adjacent to the screw holes located at the upper and lower corners of the mask.

   c) Replace the axle screw (Figure 18, #3).

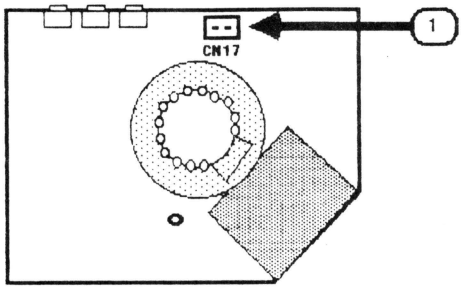

FIGURE 20

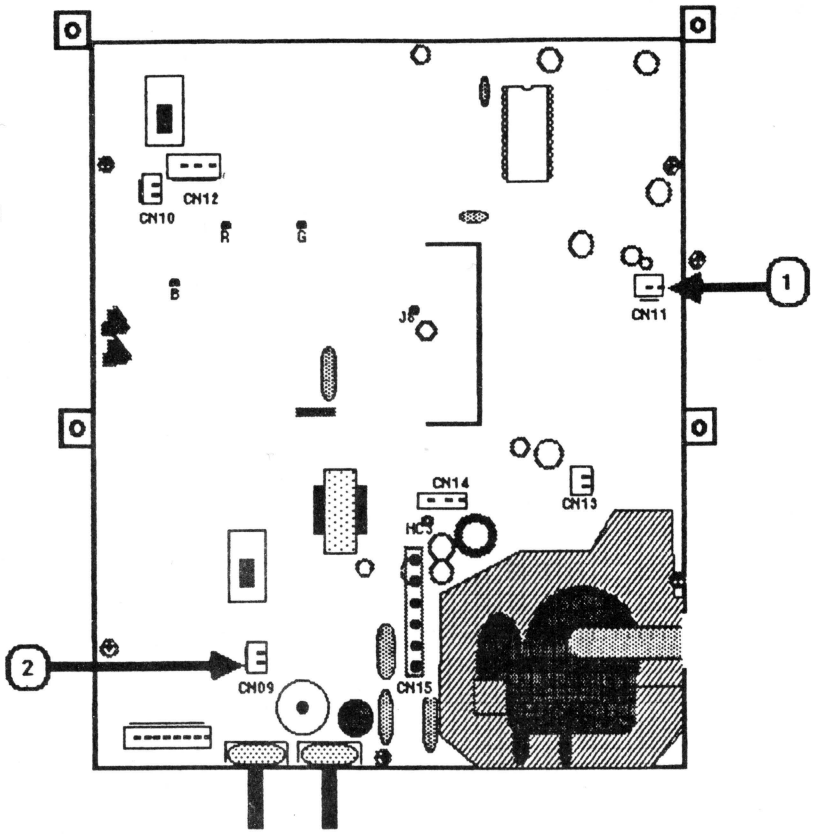

FIGURE 21

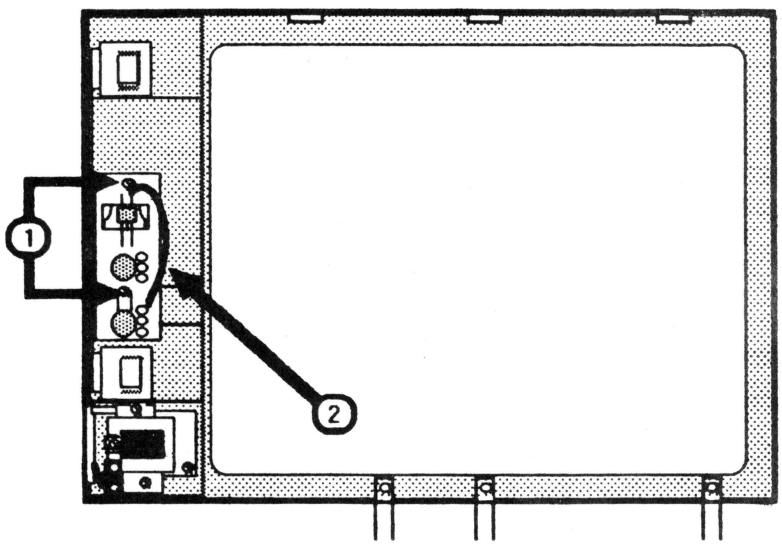

FIGURE 22

Removing and Replacing the Brightness and Contrast Control Knobs

1. Insert a flatblade screwdriver under the knob and gently pry until it is loose enough to pull off by hand.

2. To replace the knob, line up the inside of the knob with the shaft that it fits onto and slide it all the way onto the shaft.

Removing the Brightness/Contrast Control

1. Disconnect the AC cord.

2. Remove the brightness and contrast knobs.

3. Remove the rear enclosure.

4. Follow steps 4 through 8 of "Discharging the CRT."

5. As you face the back of the monitor you will see two potentiometers (brightness and contrast) and one slide switch (green only) attached to a metal plate located on the left side of the monitor. Use a pair of diagonal cutters to cut any cable ties binding the wires of those three components together.

6. Disconnect the following the connectors:

   a) CN17 (CRT socket board) -- Figure 20, #1

   b) CN11 (logic board) -- Figure 21, #1

   c) CN09 (logic board) -- Figure 21, #2

7. Carefully bring the wires outside of the chassis.

8. Remove the two screws (Figure 22, #1) that mount the metal plate to the front bezel and remove the plate.

   NOTE: If you are removing the contrast control, go to step 10.

9. Locate the wire (Figure 22, #2) that connects the brightness pot to the slide switch.

10. Desolder and remove the wire from the brightness pot contact.

11. Turn the plate around and remove the mounting nut and the potentiometer.

Replacing the Brightness/Contrast Control

1. Slide the pot shaft back through its fit-through on the mounting plate.

2. Orient the pot with the contacts facing in the same direction as they are on the brightness/contrast pot and replace the mounting nut.

3. If you are replacing the brightness control, solder the wire that was previously removed to the single contact.

4. Mount the plate back onto the front bezel.

5. Tie the wires together with new cable ties if you have them. Also, tie the three sets of wires to the wires extending from the On/Off switch.

6. Route the wires back through the cable clamp located just in front of the power transformer.

7. Connect the following connectors:

   a) CN17 (CRT socket board) -- Figure 20, #1

   b) CN11 (logic board) -- Figure 21, #1

   c) CN09 (logic board) -- Figure 21, #2

8. Replace the rear enclosure.

9. Replace the knobs.

Removing the Green Only Switch

1. Follow Steps 1 through 7 of "Removing the Brightness/Contrast Control."

2. Desolder and remove the wire connecting the green only switch to the brightness pot.

3. Pull the green button straight off its shaft.

4. Remove the two Phillips screws that attach the button to the metal plate. They are located at either side of the switch.

Replacing the Green Only Switch

1. Place the switch back into its fit-through on the mounting plate. The soldered contacts should be at the top.

2. Replace the two mounting screws.

3. Slide the green button back onto its shaft.

4. Solder the wire previously removed back onto outermost switch contact.

5. Follow steps 4 through 9 of "Replacing the Brightness/Contrast Control."

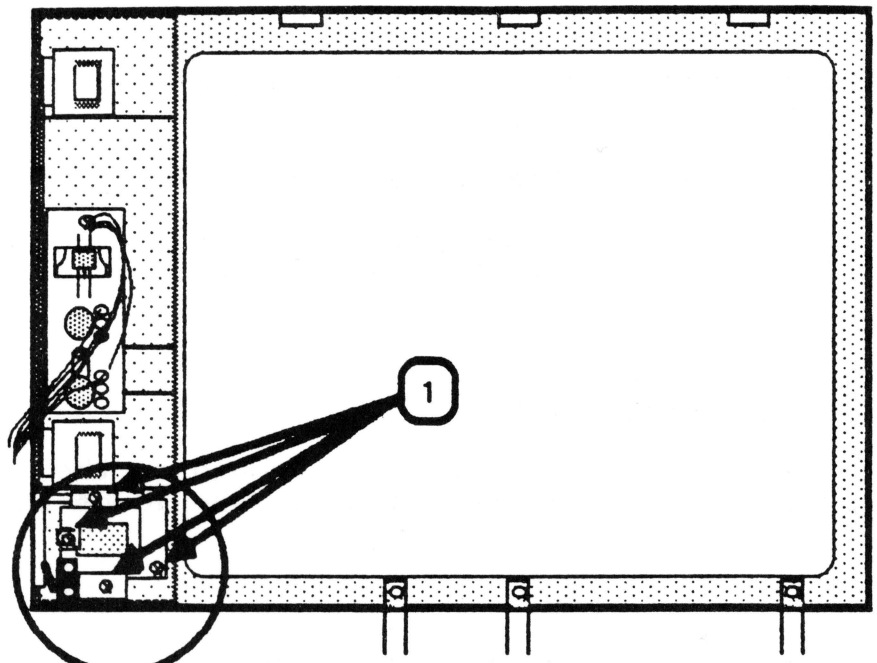

FIGURE 23

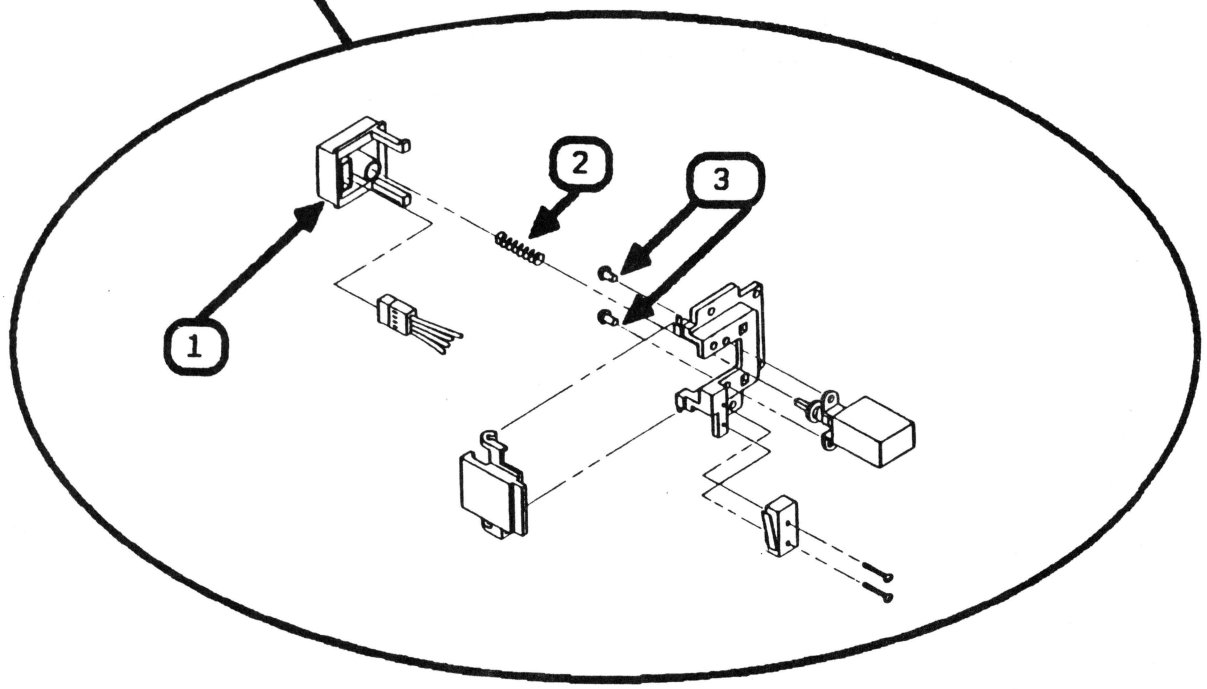

FIGURE 24

Removing the Power Button/Switch

1. Disconnect the AC power cord.

2. Remove the rear enclosure.

3. Follow steps 4 through 8 of "Discharging the CRT."

4. Locate the plastic mounting plate circled in Figure 23. Remove the four Phillips screws (Figure 23, #1).

5. The power button (Figure 24, #1) is attached to the plastic mounting plate by two legs at the top of the button. To release the button, push the two legs inward as you pull the button away from the mounting plate.

   NOTE: If you are removing the power switch, go to Step 7.

6. Locate the tiny PC board on the inside of the power button. This is the LED. It is attached to the button by two small Phillips screws. Remove the screws to separate the PC board from the power button.

7. Remove the small spring (Figure 24, #2) located on the power switch shaft.

8. Remove two Phillips switch mounting screws (Figure 24, #3) located at either side of the power switch shaft.

9. Follow the power switch wires back to their connector (CN02) on the component side of the power supply board. Disconnect CN02 and completely remove the switch.

   NOTE: If CN02 is too difficult to remove, follow steps 6 and 7 of "Removing the Power Supply Board" for easier access to the connector.

Replacing the Power Button/Switch

1. Orient the plastic mounting plate as it is shown in Figure 24.

2. Insert the switch into the plastic mounting plate with the wires on the right.

3. Place the spring back on the shaft of the switch (Figure 24, #2.) and replace the switch mounting screws.

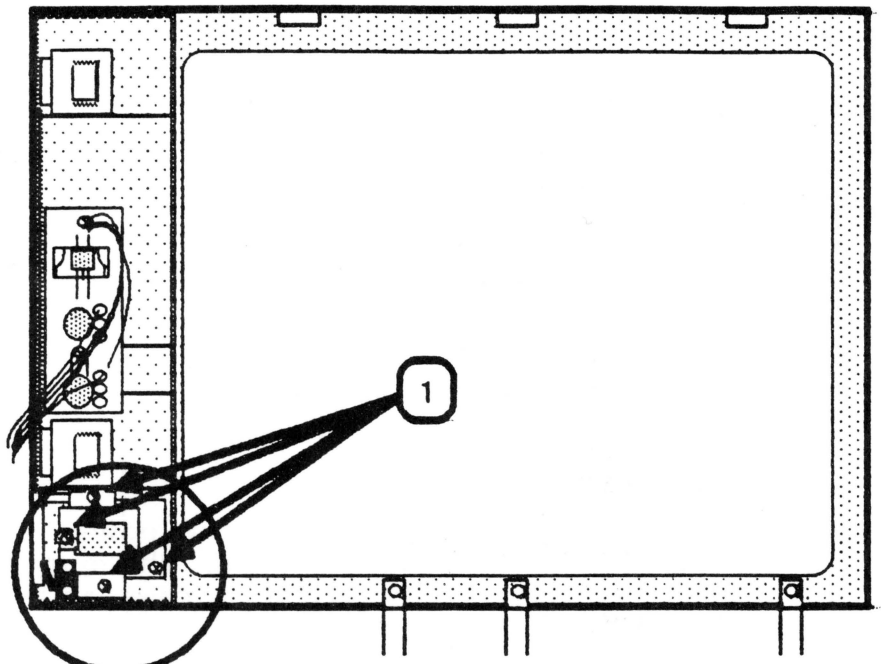

FIGURE 25

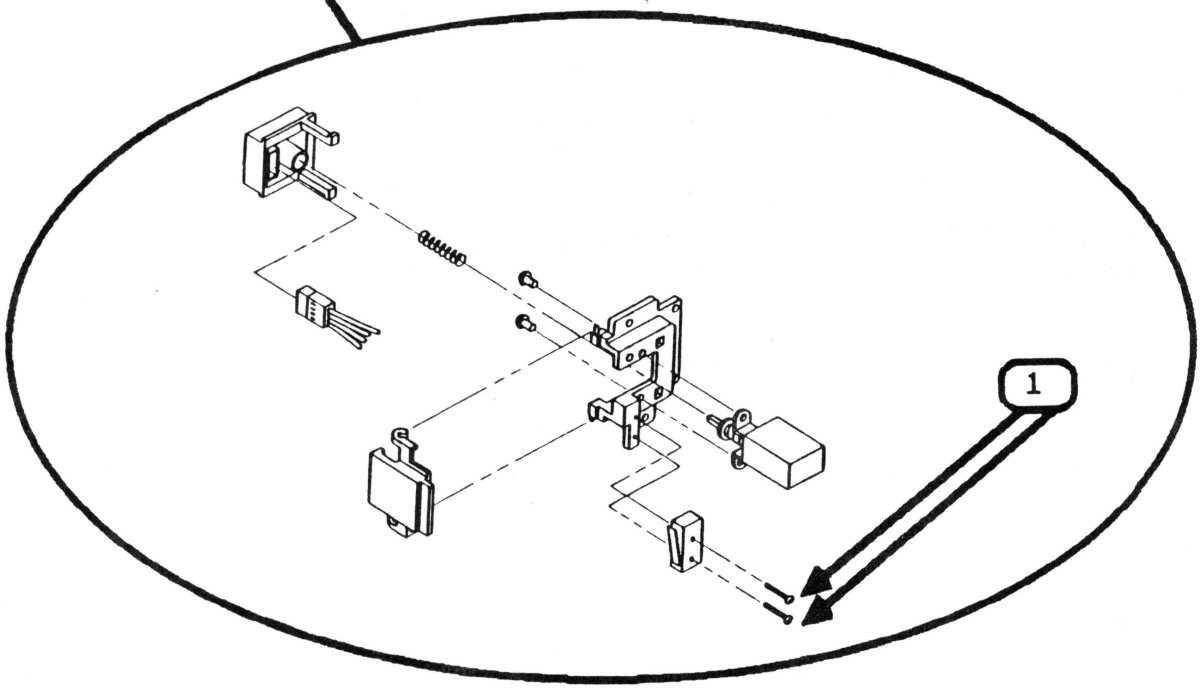

FIGURE 26

4. Hold the spring in place while you insert the power button legs back through the fit-throughs in the plastic plate. The spring fits into the hole in the back of the switch.

Removing the Tilt Motor Button/Switch

1. Disconnect the AC power cord.

2. Remove the rear enclosure.

3. Follow steps 4 through 8 of "Discharging the CRT."

4. Locate the plastic mounting plate circled in Figure 25. Remove the four mounting screws (Figure 25, #1).

5. Remove the two screws (Figure 26, #1) that secure the switch to the plastic plate.

6. Follow the tilt switch wires to where they connect to the power supply board by connector CN07. Disconnect CN07 from the power supply board.

   NOTE: If CN07 is too difficult to remove, follow steps 6 and 7 of "Removing the Power Supply Board" for easier access to CN07. Then continue with the next step.

7. Pull the tilt button back and away from the plastic plate until it snaps off.

Replacing the Tilt Motor Button/Switch

1. Snap the tilt button back on to its hinges.

2. Replace the two mounting screws that secure the switch to the plastic plate.

3. Connect the switch connector (CN07) to the power supply board.

4. Replace the four mounting screws to secure the plastic plate to the front bezel.

apple computer

AppleColor Monitor 100 Technical Procedures

Section 3

Adjustments

Logic Board Adjustments.....3.3
Introduction.....3.3
Materials Needed.....3.3
Set Up Procedure.....3.5
Evaluating the Video Test.....3.7
Vertical Adjustments.....3.9
Horizontal Adjustments.....3.9
Focus Adjustment.....3.9

Color Adjustments.....3.11
Color Bar Check.....3.11
White Balance.....3.11

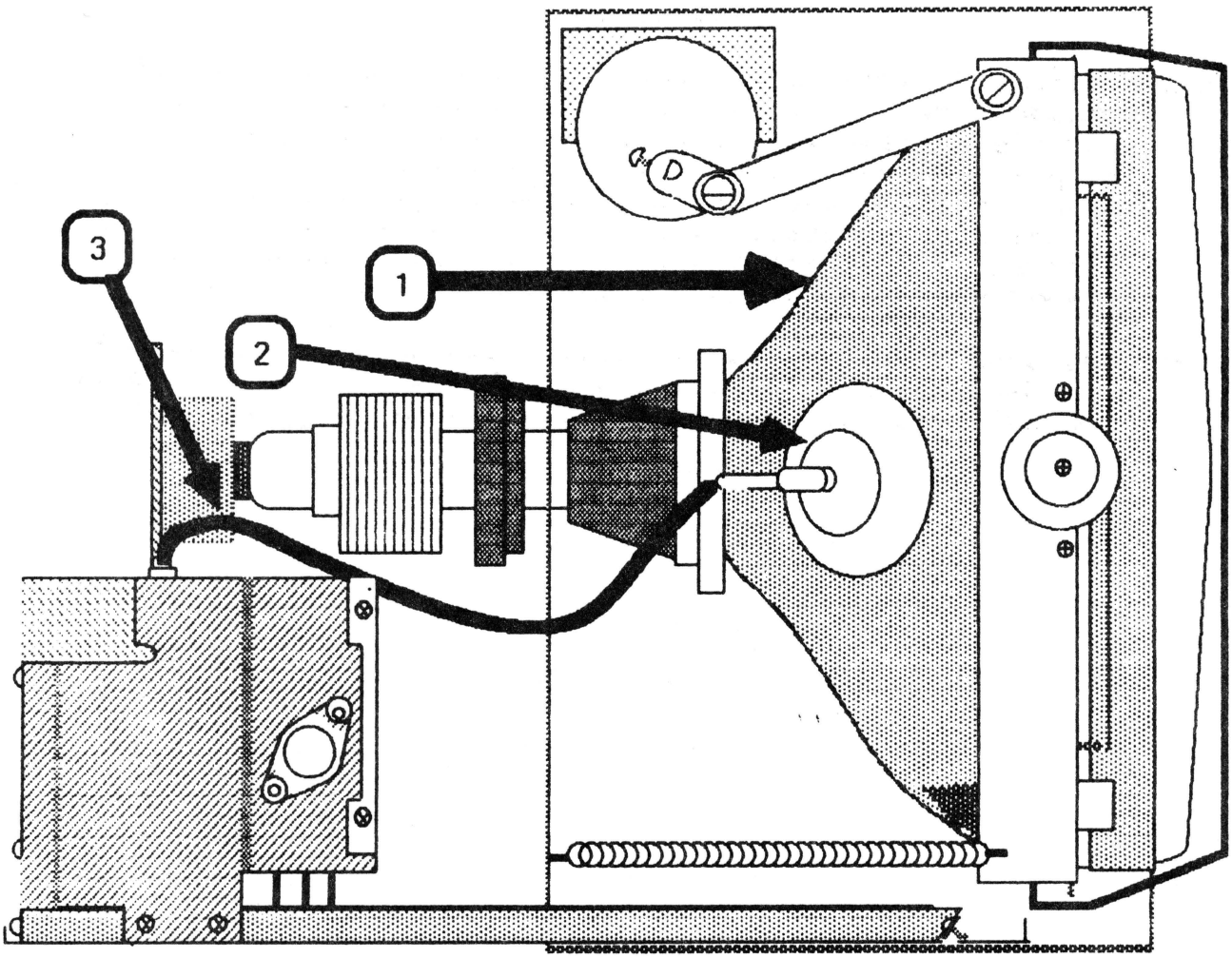

FIGURE 1

apple computer

LOGIC BOARD ADJUSTMENTS

Introduction

After replacement of the logic board in the AppleColor Monitor 100 the vertical height and/or the vertical hold may need adjustment. It is important that you read all the steps completely before beginning the adjustments, as several of them interact with each other; so if it looks like a step is not working, it's possible that another step will correct the problem.

All yoke assembly adjustments have been preset by the manufacturer. Do not attempt to make any tilt, ring, or geometric adjustments on the AppleColor Monitor 100.

Materials Needed:

Working AppleColor Monitor 100
Apple][or //e
Extended 80-Column Text AppleColor Card (P/N 699-0221)
Apple //e Diagnostic ROM Card (P/N 661-94086)
Plastic hex tip iron core adjustment tool (size 0.00)
Small plastic flatblade screwdriver (tweaker)

WARNING: There are extremely high voltages on the tube, the anode, and the anode lead. In these adjustments you will be putting your hand near these high voltage parts. It is IMPERATIVE that you watch what you are touching while making any adjustments when the power is on, otherwise injury can result. Avoid touching the tube, anode, and the anode lead (Figure 1, #1, #2, and #3). Use only one hand to make all adjustments! Never hold on to the chassis with your free hand while making adjustments.

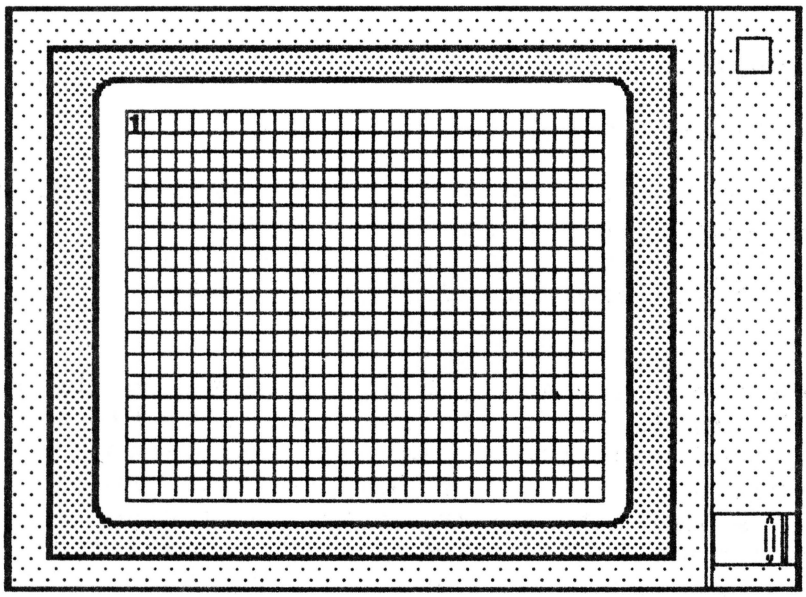

FIGURE 2

Set Up Procedure

WARNING: MAKE SURE THE POWER IS OFF ON THE MONITOR AND ON THE APPLE //e

1. Remove the rear enclosure (Take-Apart).

2. Connect the AppleColor Monitor 100 to the Apple //e. If you do not know how to do this, refer to the Extended 80-Column Text Card manual.

3. Insert the Apple //e ROM card into slot 1 or 2 and make sure that the switch on top of the ROM card is pointing toward the rear of the computer. If you do not know how to do this, refer to the Diagnostics Section of the Apple //e Technical Procedures.

4. Turn on the monitor and the Apple //e. If the menu does not appear when the power is turned on, the switch on the ROM card is in the wrong position. Shut off the system, change the switch position, and turn the system back on.

5. Select the Video Tests (V) from the menu, then press the spacebar. You will now see a high resolution pattern on the screen. Numbers 1 and 2 should be alternating in the upper left-hand corner of the screen. (Figure 2.)

6. View the screen and evaluate the vertical alignment and horizontal alignment (see the next page for evaluation procedures). Determine which one needs correction and proceed to the correct adjustment. There is interaction between the two adjustments, so you might have to do both to correct any problems.

Evaluating the Video Test (Grid Pattern)

When evaluating the pattern do not use the grid boxes in the corners as examples: use the middle rows. If the corners look incorrect even after adjustments have been made, then there may be a yoke alignment problem and you should return the monitor to Apple. If the grid boxes are not all the same size there may be a linearity problem. There are no linearity adjustments; therefore, if a linearity problem still exists after all other adjustments have been made, return the monitor to Apple. Other guidelines to follow for evaluating the vertical and horizontal alignments are as follows:

1. Refer to "Vertical Adjustments" if:

    a) the grid boxes in the top and bottom rows do not have the same height.

    b) the grid boxes are stretched out or compressed vertically.

    c) the picture is rolling.

    d) the image is pushed more to the top or bottom.

2. Refer to "Horizontal Adjustments" if:

    a) the width of the grid boxes on both sides of the screen is not the same.

    b) the grid boxes are stretched out or compressed horizontally.

    c) the picture is tearing (appears ripped).

    d) the picture is pushed more to one side of the screen than the other.

    e) the picture is rolling in a diagonal movement on the horizontal plane.

NOTE: There are two ways you can view the patterns and make adjustments. One is to view the screen and reach around to the back to do the adjusting. The second way is to set up a mirror in front of the screen and view it from the rear while making the adjustments.

WARNING: IF YOU USE THE REACHING METHOD, BE SURE YOU KNOW WHAT YOU ARE TOUCHING!

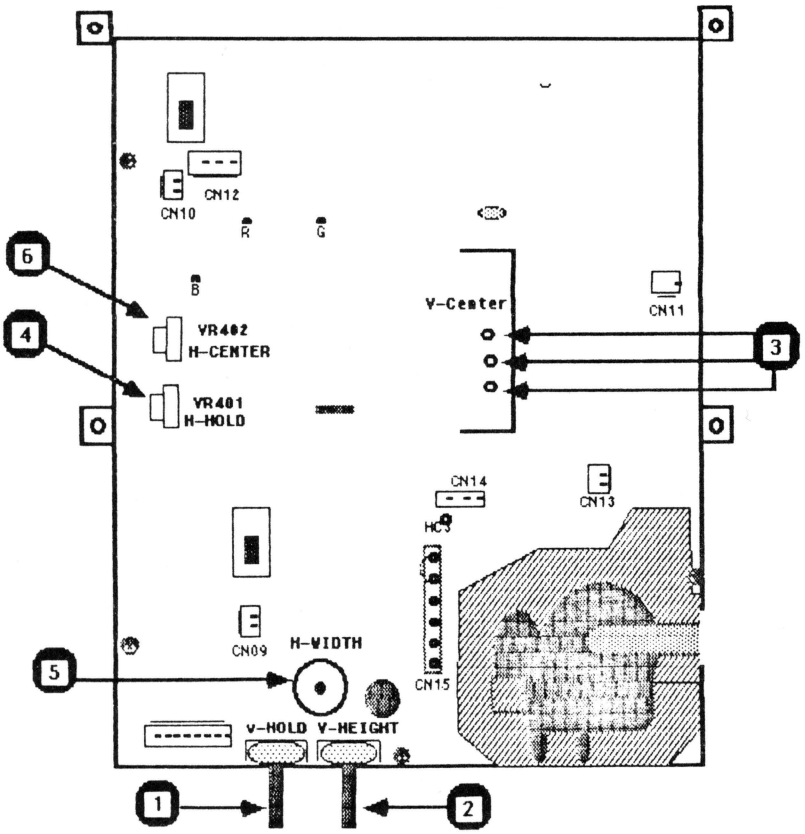

FIGURE 3

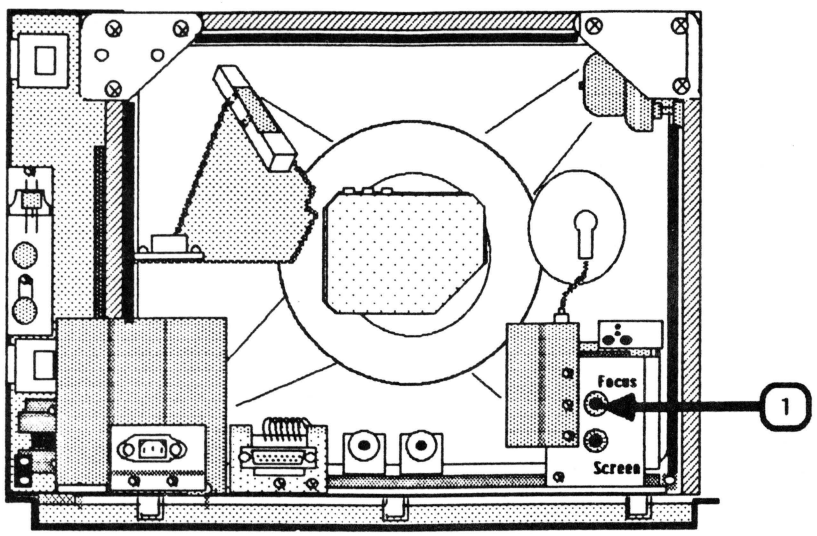

FIGURE 4

Vertical Adjustments

1. Vertical Hold: Set the vertical hold control VR301 (Figure 3, #1) to the mechanical center by turning it all the way to the left, then to the right, then back to the center of the range between left and right of its rotation. This should lock the picture on the screen and prevent any rolling.

   Turn the monitor off and back on, to make sure the vertical hold is secure.

2. Vertical Height: If the vertical height of the image is incorrect, then adjust V-HEIGHT VR302 (Figure 3, #2) until the picture is about 1/4 inch away from the top and bottom edges of the screen.

3. Vertical Center: If the vertical position of the entire image is off, carefully connect the H-C4 connector (Figure 3, #3) to the best position pin to correct this problem. (BE CAREFUL, IT IS CLOSE TO THE CRT NECK)!

Horizontal Adjustments

1. Horizontal Hold: If the picture on the tube is not locked and is tearing, adjust H-HOLD R402 (Figure 3, #4).

2. Horizontal Width: The image should be about 1/4 inch away from each side of the screen. If the width of the image looks too narrow or too wide, adjust the H-WIDTH L406 (Figure 3, #5) until you have the desired width.

3. Horizontal Center: If the image is too far to one side of the screen, adjust H-CENTER VR402 (Figure 3, #6) until the image is centered.

Focus Adjustment

If the picture on the screen is blurry adjust the FOCUS pot, which is located at the back of the flyback transformer. (Figure 4, #1.)

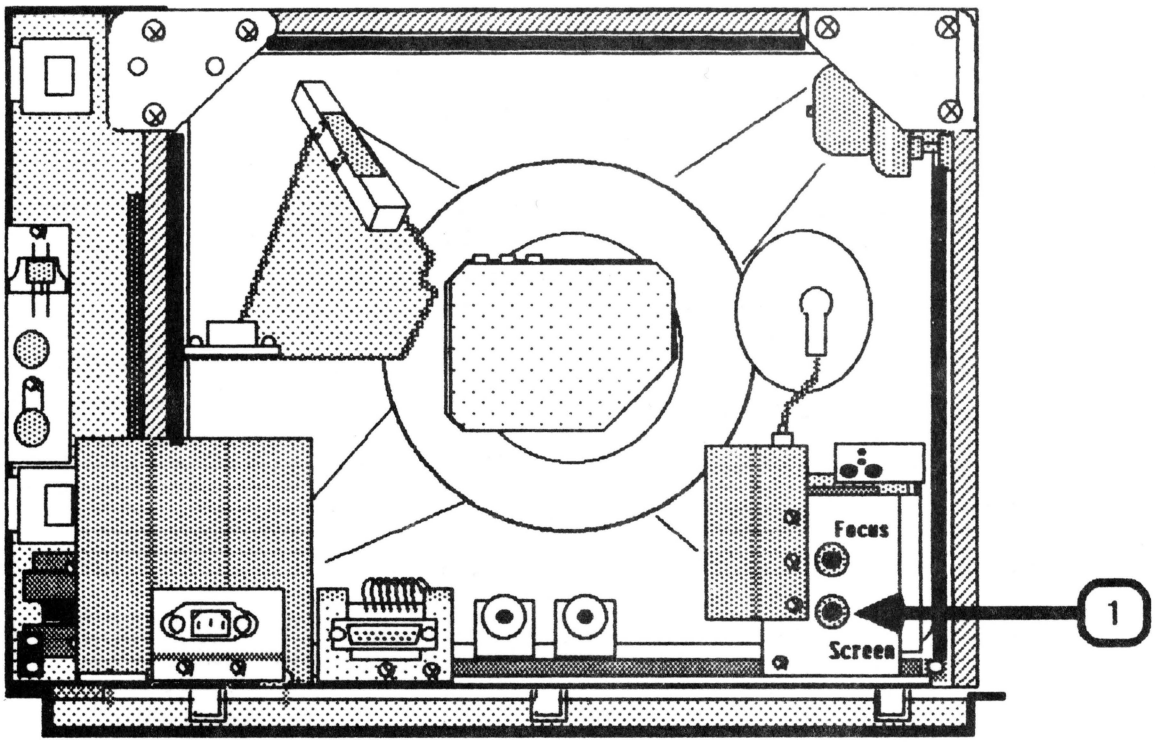

FIGURE 5

Color Adjustments

Color Bar Check

1. Insert the Extended 80-Column Text/AppleColor Card into the auxiliary slot of the Apple //e. If you do not know how to do this, refer to the user's manual for the card.

2. Locate the two DIP switches on the Extended 80-Column Card and switch both levers to the lower (bottom) position.

3. Replace the Apple //e lid.

4. Insert the Extended 80-Column Text AppleColor Card "Demo Drivers Diskette" (ProDOS Based) into the disk drive.

5. Turn on the Apple //e.

6. Turn on the AppleColor Monitor 100.

7. When the menu appears, press the down arrow on the keyboard to select **"DHR.COLORS"**, then press **"RETURN"**.

   The monitor will display 16 color bars with the name of the color beneath each bar.

8. Make sure that the colors match their names. If they do not match, follow the procedures below to adjust the color.

White Balance

Proper color adjustment is achieved by obtaining "white balance." The white balance is obtained by adjusting the screen potentiometer of the flyback transformer along with all the pots located on the CRT socket board. For this procedure you do not need to connect the monitor to the Apple //e.

WARNING: MAKE SURE THAT THE POWER IS OFF!

1. Remove the rear enclosure (Take-Apart).

   NOTE: Do not connect the DB-15 video cable to the monitor.

2. Connect the AC power cord to the back of the monitor and to the wall outlet.

3. Turn the SCREEN pot (Figure 5, #1) counterclockwise as far as it will turn.

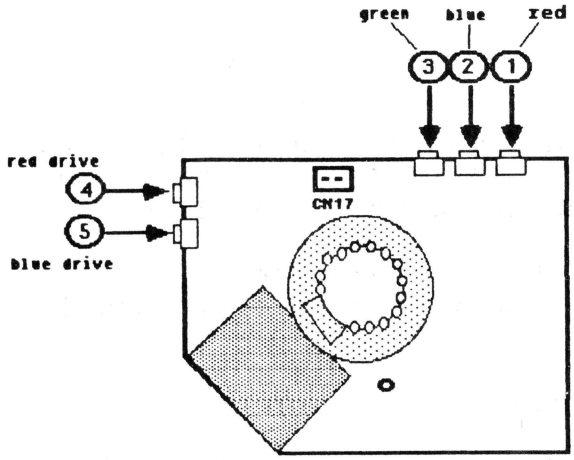

FIGURE 6

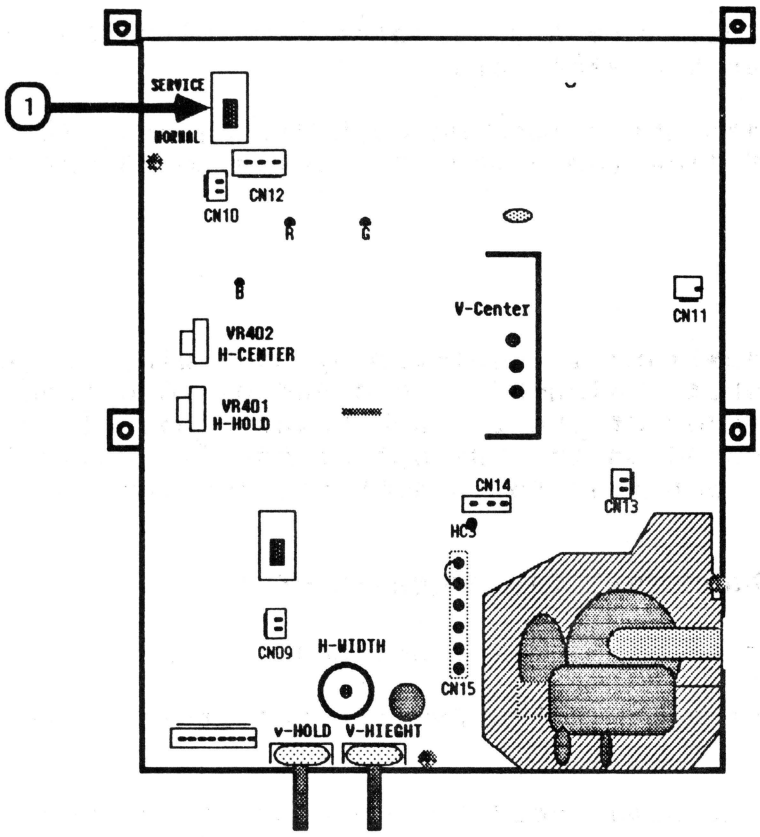

FIGURE 7

4. Adjust the following pots, located on the CRT socket board, to their mechanical centers by turning them all the way to the left, then to the right, then back to the center of the range between left and right:

   a) VR501 (Red Bias) -- Figure 6, #1

   b) VR502 (Green Bias) -- Figure 6, #2

   c) VR503 (Blue Bias) -- Figure 6, #3

   d) VR504 (Red Drive) -- Figure 6, #4

   e) VR505 (Blue Drive) -- Figure 6, #5

5. Use the eraser end of a pencil, or another nonconductive tool, to push Switch (SW) 101 (Figure 7, #1) to the SERVICE position.

6. Turn on the monitor.

7. Observing the center of the screen, turn the SCREEN pot gradually clockwise until you see a horizontal line.

   NOTE: Do not turn the SCREEN pot until the line is glowing, but just until you see a fine, solid line.

   THE LINE SHOULD APPEAR WHITE. If the line is not white, repeat step 7. Watch closely to see which color appears first. Then, adjust the appropriate bias pot(s) (listed in step 4, above) until that color is defeated. If another color appears, repeat this step until the line is white.

8. Turn the SCREEN pot slightly clockwise to make sure that the line remains white. If it is not white adjust the appropriate color bias pot to obtain a white line.

9. Turn the SCREEN pot counterclockwise until the white line disappears.

10. Turn off the monitor and switch SW 101 (Figure 7, #1) back to the NORMAL position.

11. Turn the monitor back on and repeat the steps listed in the "Color Bar Check" in this manual.

apple computer

AppleColor Monitor 100 Technical Procedures

Section 4

Troubleshooting Guide

Introduction.....4.2
Symptoms:
- No raster.....4.2
- One horizontal line appears.....4.2
- One vertical line appears.....4.2
- Raster deformed abnormally.....4.2
- Abnormal raster with winding or excessive picture fluctuation.....4.3
- Spot remains with monitor off.....4.3
- Brightness range abnormal or picture is flashing.....4.3
- Raster size small picture abnormally bright.....4.3
- No vertical synchronization.....4.3
- Raster not centered.....4.3
- No picture no contrast.....4.3
- Picture/charcters inclined.....4.3
- Picture characters shiver.....4.4
- 15 or more seconds for picture to appear.....4.4
- Picture appears/disappears.....4.4
- Horizontal linearity bad.....4.4
- Vertical linearity bad.....4.4
- Won't focus.....4.4
- Colors not right.....4.4

Introduction

This is the troubleshooting section. It consists of a symptom chart, showing the symptom and an action to be taken to rectify the problem. The best way to use this section is:

1. Look on the chart to find the symptom that matches what the defective monitor is doing.

2. Try the recommended action.

SYMPTOM	ACTION
NO RASTER	Check that all connectors are secure on the P/S and logic board. Check fuse 601 on the P/S board. Replace the Power Switch. Replace the P/S board. Replace the logic board. Replace the power transformer. Replace the CRT.
ONE HORIZONTAL RASTER LINE APPEARS	Check to make sure that SW101 on the logic board is in the NORMAL position. Replace the logic board. Replace the CRT.
ONE VETICAL RASTER LINE APPEARS	Replace the logic board. Replace the CRT.
RASTER DEFORMED ABNORMALLY	Replace the CRT.

SYMPTOM	ACTION
ABNORMAL RASTER WITH WINDING OR EXCESSIVE PICTURE FLUCTUATION	Replace the logic board.
SPOT REMAINS WHEN UNIT IS OFF	Replace the logic board.
BRIGHTNESS RANGE ABNORMAL OR PICTURE IS FLASHING	Replace the logic board. Replace the P/S board. Replace the power transformer.
RASTER SIZE SMALL PICTURE ABNORMALLY BRIGHT	See Section 3, "Adjustments." Replace the logic board.
NO VERTICAL SYNCHRONIZATION	See Section 3, "Adjustments." Replace the logic board.
RASTER NOT CENTERED	See Section 3, "Adjustments." Replace the logic board. Replace the CRT.
NO PICTURE NO CONTRAST	Replace the logic board.
PICTURE / CHARACTERS INCLINED	See Section 3, "Adjustments."

SYMPTOM	ACTION
FINE NOISES IN PICTURE. CHARACTERS SHIVER.	Make sure the ground strap is secured to the power transfomer. Replace the logic board.
FIFTEEN OR MORE SECONDS FOR PICTURE TO APPEAR	Replace the CRT.
PICTURE APPEARS DISAPPEARS	Replace the logic board. Replace the CRT.
HORIZONTAL LINEARITY BAD	Replace the logic board. Replace the CRT.
VERTICAL LINEARITY BAD	Replace the logic board. Replace the CRT.
WON'T FOCUS	Replace the logic board. Replace the CRT.
COLORS NOT RIGHT	See Section 3, "Adjustments."

AppleColor Monitor 100 Technical Procedures

Section 5

Illustrated Parts List

The figures and lists below include all piece parts that can be purchased separately from Apple for the AppleColor Monitor 100, along with their part numbers. These are the only parts available from Apple. Refer to your Apple Service Programs manual for prices.

Contents:

AppleColor Monitor 100.....5.3
Monitor Cables.....5.5

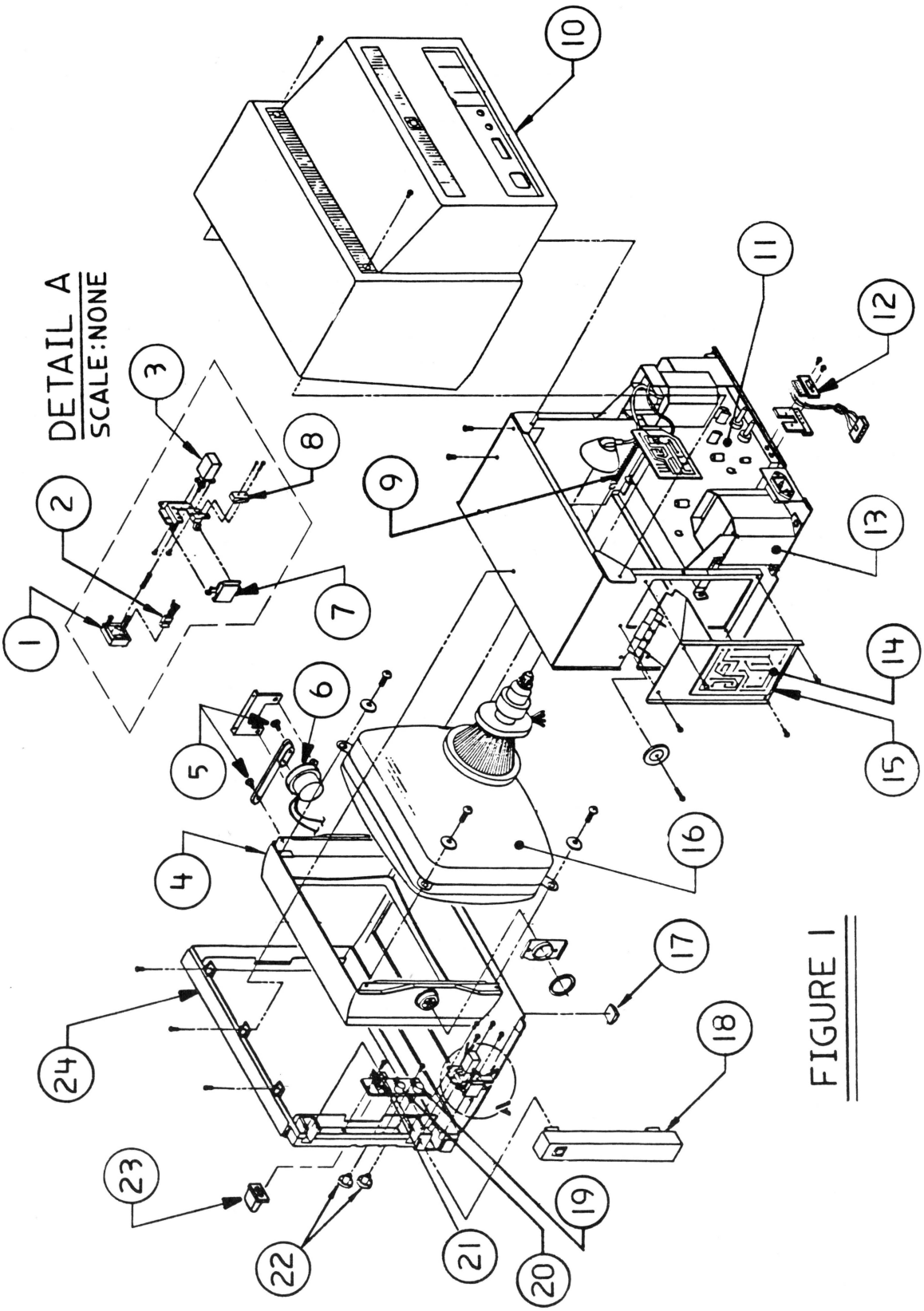
DETAIL A
SCALE:NONE
1
2
3
4
5
6
7
8
9
10
11
12
13
14
15
16
17
18
19
20
21
22
23
24

FIGURE 1

APPLECOLOR MONITOR 100

Item	Part No.	Description
1	815-0543	Power Switch Bottom
2	970-1000	LED Assembly
3	970-0995	Power Switch
4	815-0549	Mask
5	931-0003	Screw, shldr, brass, RH thread
6	970-0997	Tilt Motor
7	815-0544	Button, Tilt Switch
8	970-0996	Tilt Motor Switch
9	970-0998	Tilt Loading Spring
10	815-0546	Rear Enclosure
11	661-0238	Logic Board, Rev. O
	661-0292	Logic Board, Rev. A
12	970-0999	DB15 Connector, AppleColor Monitor 100, Rev. 0
	076-0196	DB15 Connector, AppleColor Monitor 100, Rev. A
13	076-8119	Power Transformer
14	740-0204	Fuse, 2A UL, CSA
15	661-0237	Power Supply Board
16	076-8120	CRT/Yoke Assembly
17	865-0020	Rubber Foot
18	815-0545	Control Panel Door
19	970-0990	Brightness Control
20	970-0991	Contrast Control
21	970-0994	Green Only Switch
22	815-0547	Contrast/Brightness Control Knob
23	815-0550	Green Only Button
24	815-0542	Front Bezel

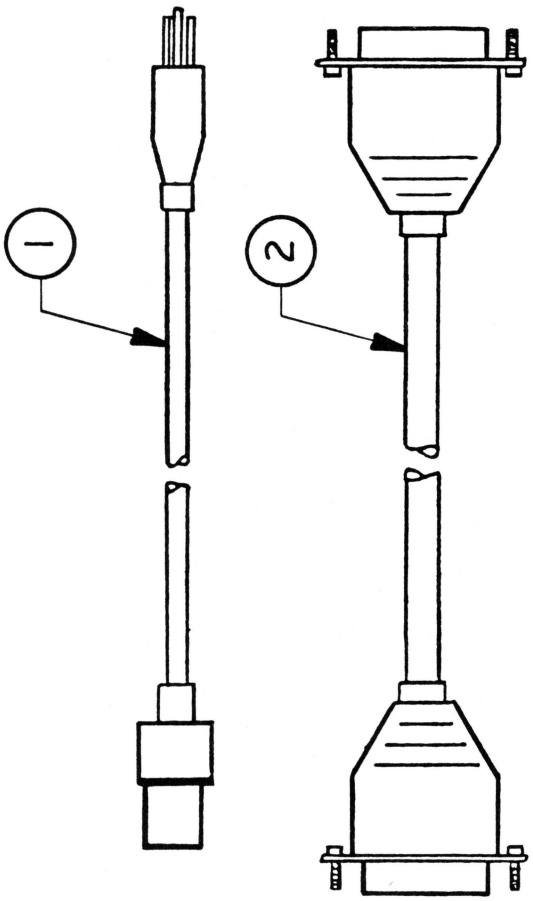

FIGURE 2

APPLECOLOR MONITOR 100 - CABLES (Figure 2)

Item	Part No.	Description
1	970-0876	Cable, AC Power Cord, AppleColor Monitor 100
2	590-0194	Cable, Video, AppleColor Monitor 100

Flat Panel
Display

apple computer

APPLE //c FLAT PANEL DISPLAY TECHNICAL PROCEDURES

TABLE OF CONTENTS

Section 1. Troubleshooting

Introduction.....1.1
Flat Panel Display Troubleshooting Flowchart.1.2

Section 2. Diagnostics
(See Note).....2.1

Section 3. Take-apart

Introduction.....3.3
Opening the Flat Panel Display Case.....3.5
Removing the Flat Panel Liquid Crystal Display (LCD).....3.5
Installing the Flat Panel Liquid Crystal Display (LCD).....3.7
Removing the Contrast Card.....3.9
Installing the Contrast Card.....3.9
Removing the Inverter Switch Cover.....3.11
Installing the Inverter Switch Cover.....3.11
Removing the Connector Box.....3.13
Installing a Connector Box.....3.13
Removing the Ribbon Cable.....3.15
Installing the Ribbon Cable.....3.17

©Apple Computer, Inc., 1984.
No part of this document may be reproduced in any form without the written permission of Apple Computer, Inc.

Apple and the Apple logo are registered trademarks of Apple Computer, Inc.

apple computer

Apple //c Flat Panel Display Technical Procedures

Section 1

Troubleshooting

Contents:

Introduction.....1.2
Symptom Table.....1.3

Introduction

The Apple //c Flat Panel Display consists of the following electronic replaceable modules:

1. The Liquid Crystal Display (LCD)
2. The contrast card
3. The connector box
4. The ribbon cable

The Symptom Table on the following page shows possible failure symptoms and an action to be taken to rectify the problem. The best way to use this table is:

1. Look on the chart to find the symptom shown by the defective Flat Panel Display.
2. Try the recommended actions in the order in which they are listed.

apple computer

SYMPTOM	ACTION
NO DISPLAY	Check that all connectors are secure inside the display panel. Check that the ribbon cable is connected inside the connector box. Replace the Liquid Crystal Display Replace the connector box. Replace the ribbon cable
NOT ABLE TO ADJUST CONTRAST	Replace the contrast card
INVERTER SWITCH NOT WORKING	Replace the contrast card
GARBAGE DISPLAY	Replace the connector box Replace the Liquid Crystal Display Replace the contrast card

apple computer

Apple //c Flat Panel Display Technical Procedures

Section 2

Diagnostics

NOTE: USE THE APPLE //c DIAGNOSTIC DISKETTE (VIDEO TEST) TO TEST THE FLAT PANEL DISPLAY. REFER TO THE APPLE //c TECHNICAL PROCEDURES IF YOU DO NOT KNOW HOW TO USE THE DIAGNOSTIC DISKETTE.

apple computer

Apple //c Flat Panel Display Technical Procedures

Section 3

Take-apart

Contents:

Introduction.....3.3
Opening the Flat Panel Display Case.....3.5
Removing the Flat Panel Liquid Crystal Display (LCD).....3.5
Installing the Flat Panel Liquid Crystal Display (LCD)...3.7
Removing the Contrast Card.....3.9
Installing the Contrast Card.....3.9
Removing the Inverter Switch Cover.....3.11
Installing the Inverter Switch Cover.....3.11
Removing the Connector Box.....3.13
Installing a Connector Box.....3.13
Removing the Ribbon Cable.....3.15
Installing the Ribbon Cable.....3.17

Introduction:

The Flat Panel Display is a peripheral product for the Apple //c Computer. It is made up of two major modules: the display panel (Figure 1, #1) and the connector box (Figure 1, #2). Figure 1, #3 shows the flat ribbon cable which connects the two modules. The Flat Panel Display is powered by the Apple //c extended video port; **no additional power source is required**.

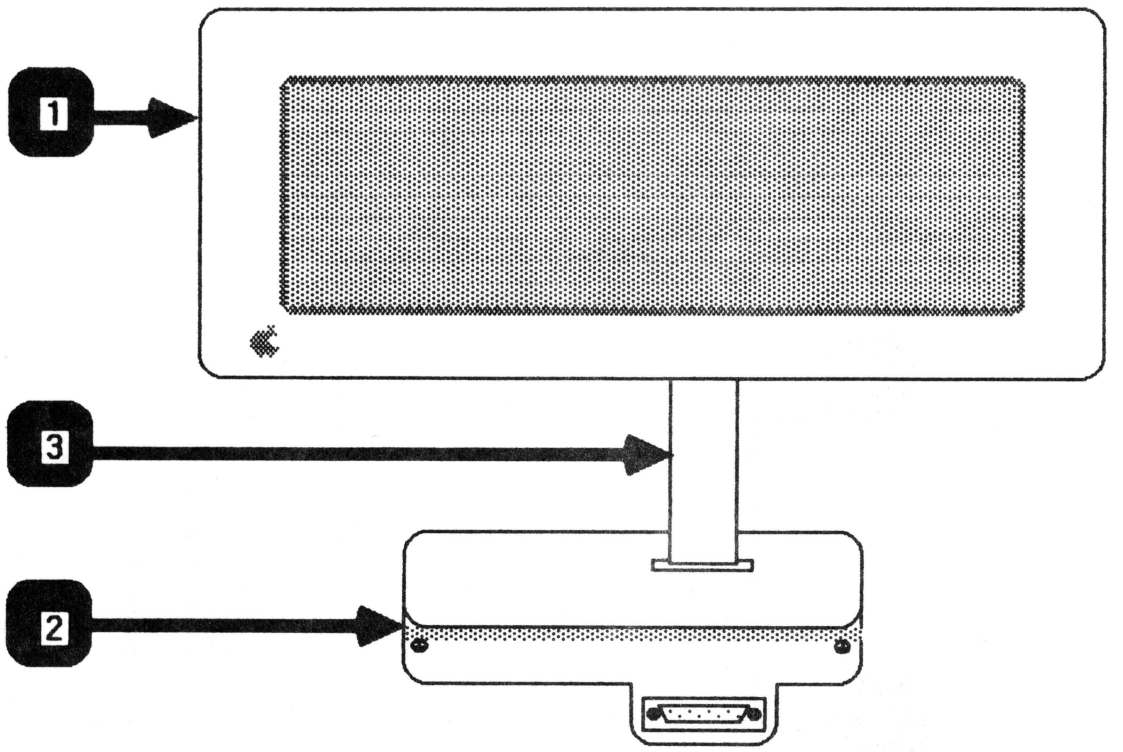

FIGURE 1

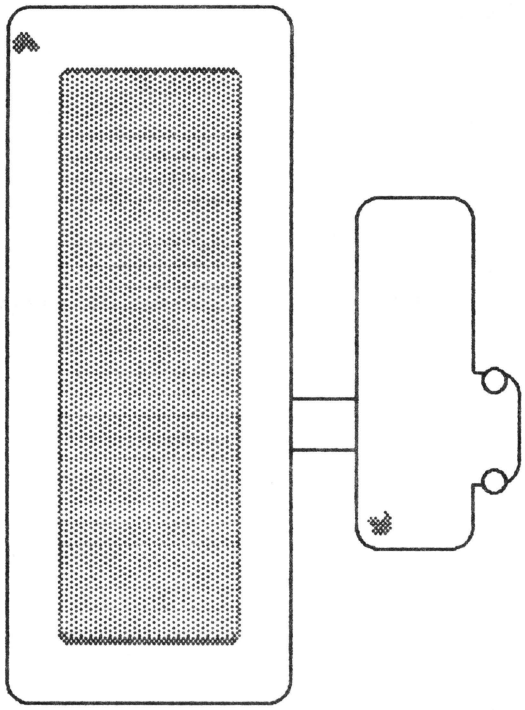

FIGURE 2

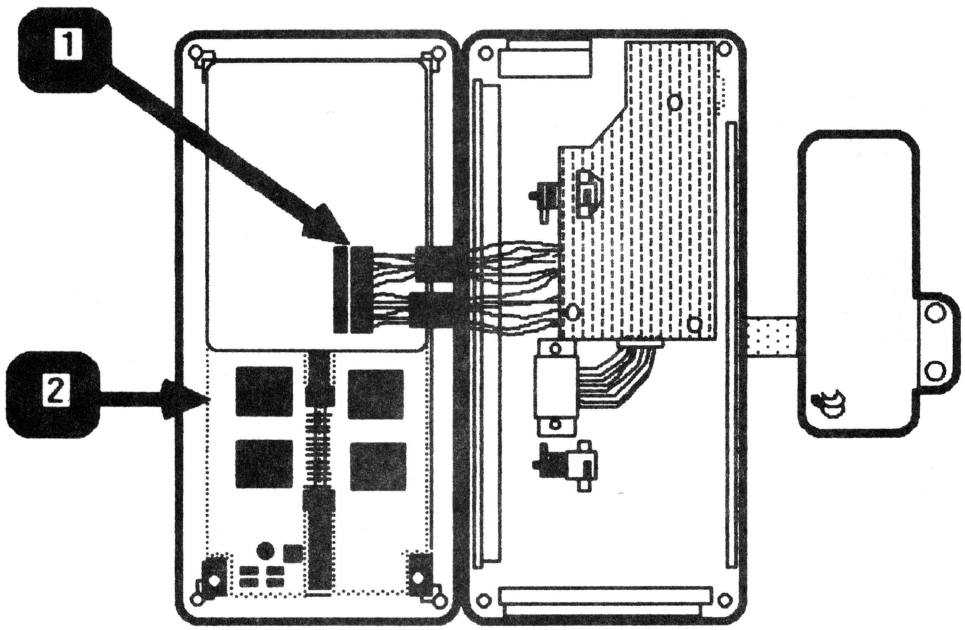

FIGURE 3

Opening the Flat Panel Display Case

1. Place the Flat Panel Display, face down, on a protective foam pad.

2. Remove the four Phillips screws from the corners of the case back.

NOTE: There is a cable inside the case which connects the front half to the back half. This cable is located at the middle of the display and is about two inches long.

3. Flip the panel over (lens facing up) and carefully pry the sides of the case until the front half snaps off.

4. Orient the Flat Panel Display as shown in Figure 2.

5. Turn the top half of the panel over in the same way you would open a book. (See Figure 3).

Removing the Flat Panel Liquid Crystal Display (LCD)

1. Follow the steps listed in "Opening the Flat Panel Display Case" (above).

2. Disconnect the contrast card connector (Figure 3, #1) from the LCD (Figure 3, #2).

3. Carefully pry the flat panel LCD (Figure 3, #2) out of the case.

4. If the case lens comes loose from the front panel, follow these steps to repair it:

   a) Place the lens in the panel so that the raised side protrudes through the front of the panel.

   b) Press down on the lens until the plastic posts come through the holes at the borders of the lens.

   c) Put a small drop of fast drying glue for plastic bonding (preferably LOCTITE) on each plastic post. Hold the lens firmly against the panel until the glue is dry.

   d) Use a plastic lens cleaner to clean both sides of the lens.

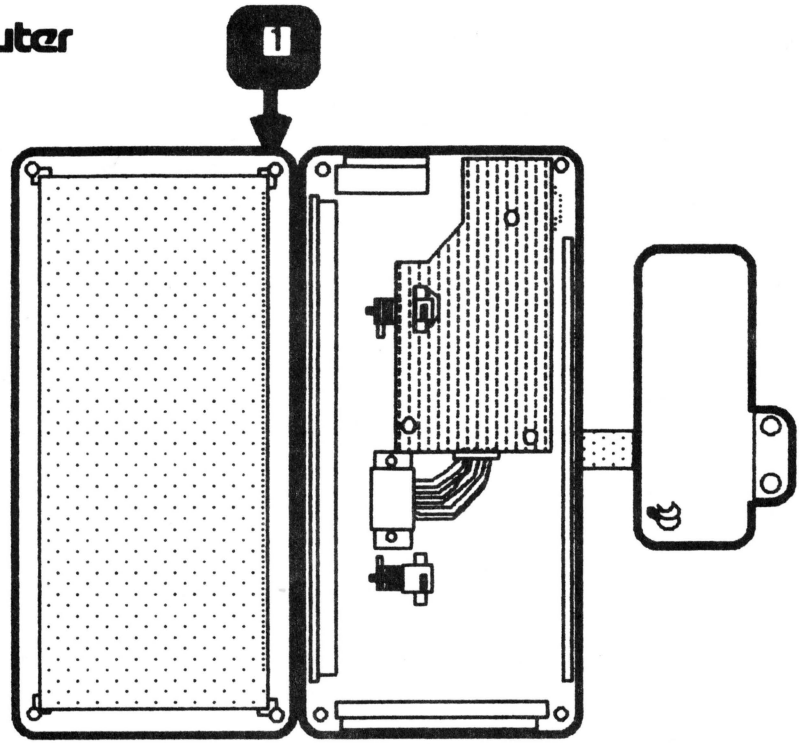

FIGURE 4

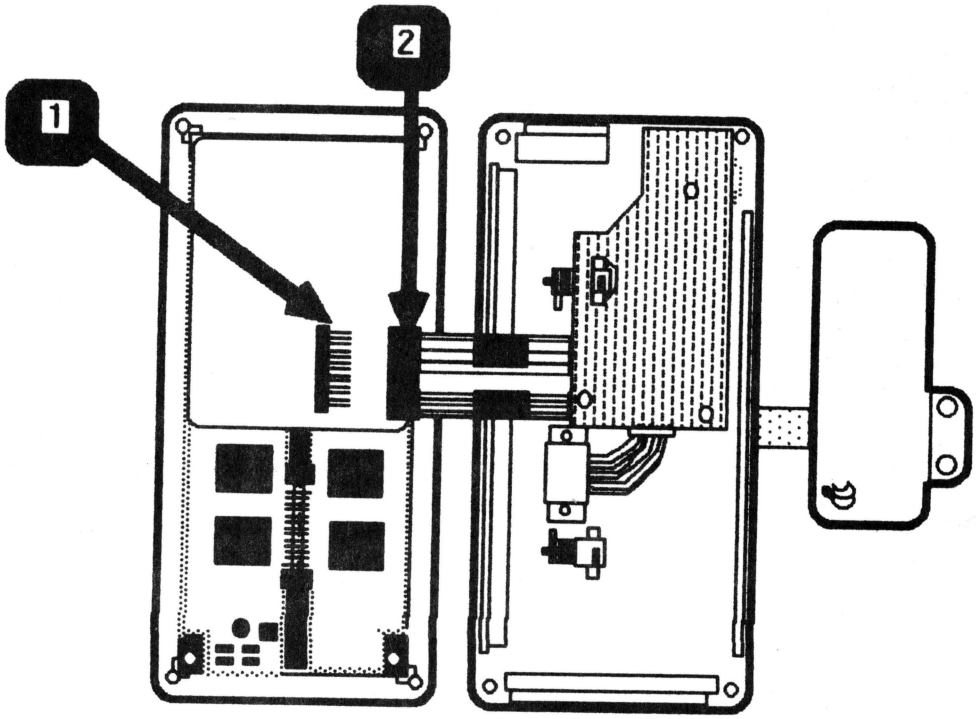

FIGURE 5

Installing the Flat Panel Liquid Crystal Display (LCD)

1. Place the both halves of the Flat Panel Display case on a protective foam pad, and orient them as shown in Figure 4.

   NOTE: The Apple logo should be positioned as shown in Figure 4, #1.

2. Place the LCD in the front panel with the connector (Figure 5, #1) on the right half of the LCD (pins pointing to the right).

3. Press down on the LCD until it snaps into place on all sides.

4. Connect the contrast card connector (Figure 5, #2) to the LCD (Figure 5, #1).

5. Fold the LCD over and onto the back half of the Flat Panel Display.

6. Press the two halves together until all fours sides snap into place.

7. Replace the Phillips screws.

8. Use the Apple //c Diagnostic Diskette (video test) to make sure that the Flat Panel Display is functioning properly.

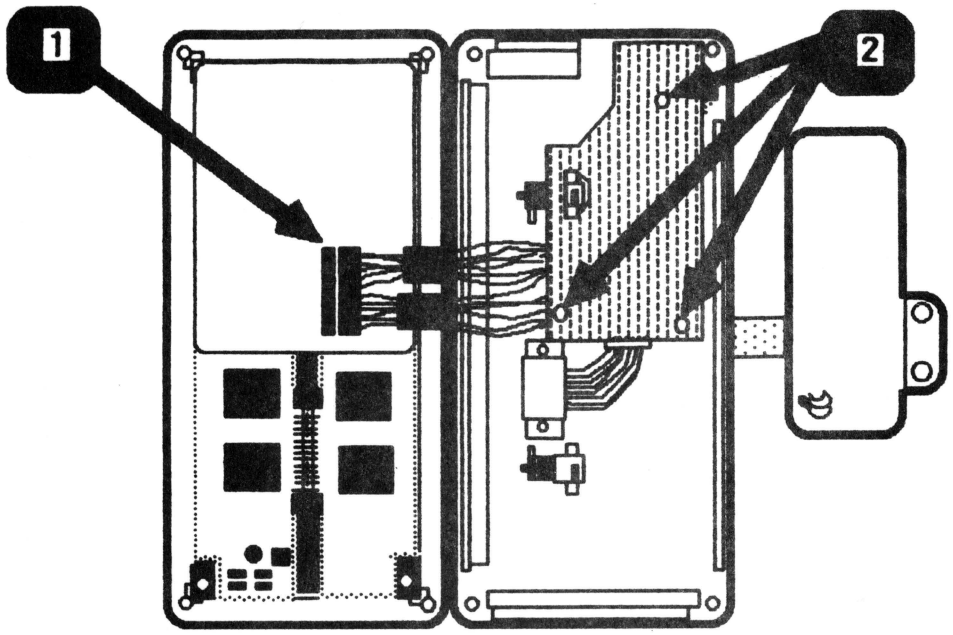

FIGURE 6

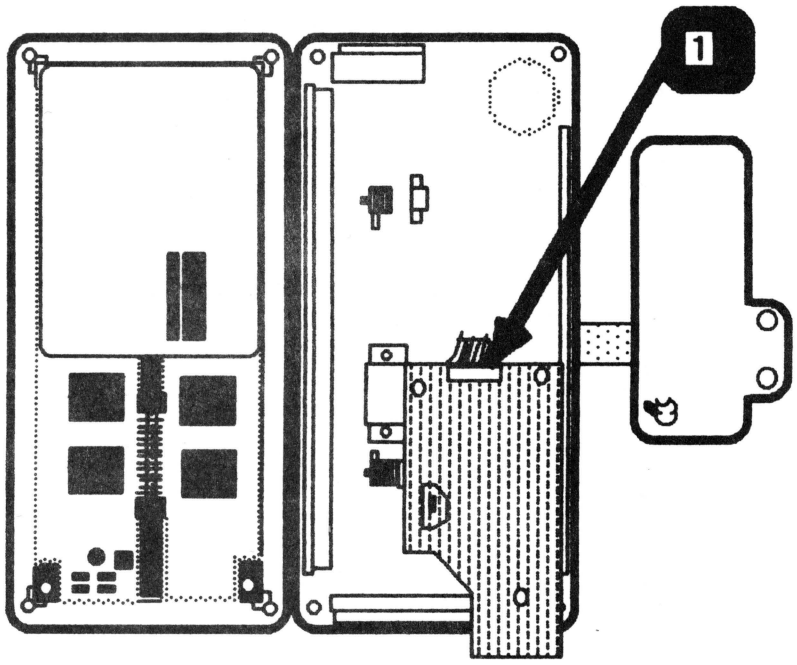

FIGURE 7

Removing the Contrast Card

1. Follow the steps listed under " Opening the Flat Panel Display Case").

2. Disconnect the contrast card connector (Figure 6, #1) from the LCD.

3. Remove the Phillips screws (Figure 6, #2) which secure the card to the case and lift the card out.

4. Flip the contrast card over so that you can easily access the ribbon cable connector (Figure 7, #1).

5. Disconnect the ribbon cable connector from the contrast card.

Installing the Contrast Card

1. Connect the ribbon cable (coming from connector box) to the contrast card with the solid side of the connector facing up. (See Figure 7, #1.)

2. Place the contrast card on the plastic support posts as shown in Figure 6.

3. Replace the Phillips screws (Figure 6, #2) to secure the card to rear panel.

4. Connect the LCD connector to the LCD. (See Figure 6, #1.)

5. Fold the LCD over and onto the back half of the Flat Panel Display.

6. Press the two halves together until all fours sides snap into place.

7. Replace the Phillips screws.

8. Use the Apple //c Diagnostic Diskette (video test) to make sure the Flat Panel Display is functioning properly.

Removing the Inverter Switch Cover

1. Follow the steps listed under "Remove the Contrast Card."

   NOTE: The inverter switch cover may stay with the contrast card as you remove it. If it is not on the card, it is inside the flat panel case.

2. Remove the inverter switch cover from inside the flat panel case or from the contrast card, whichever the case may be.

Installing the Inverter Switch Cover

1. Place the switch cover in the slot located at the upper left corner of the back case. There is only one way the switch cover will fit.

2. Follow the steps listed under "Replacing the Contrast Card".

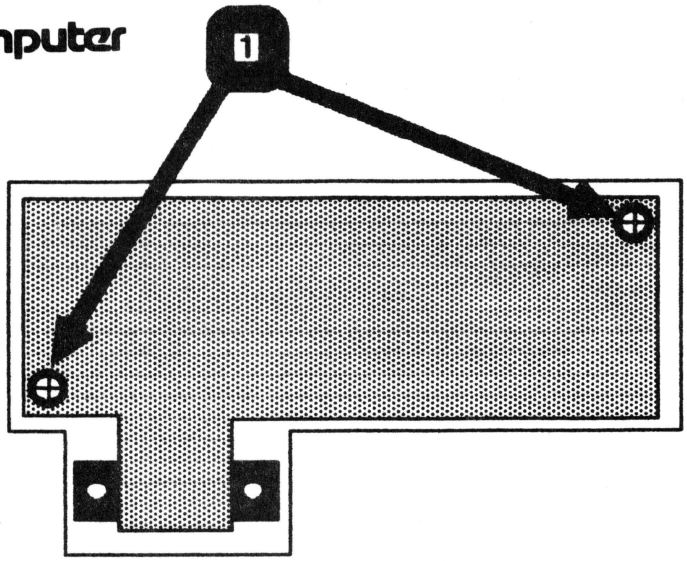

FIGURE 8

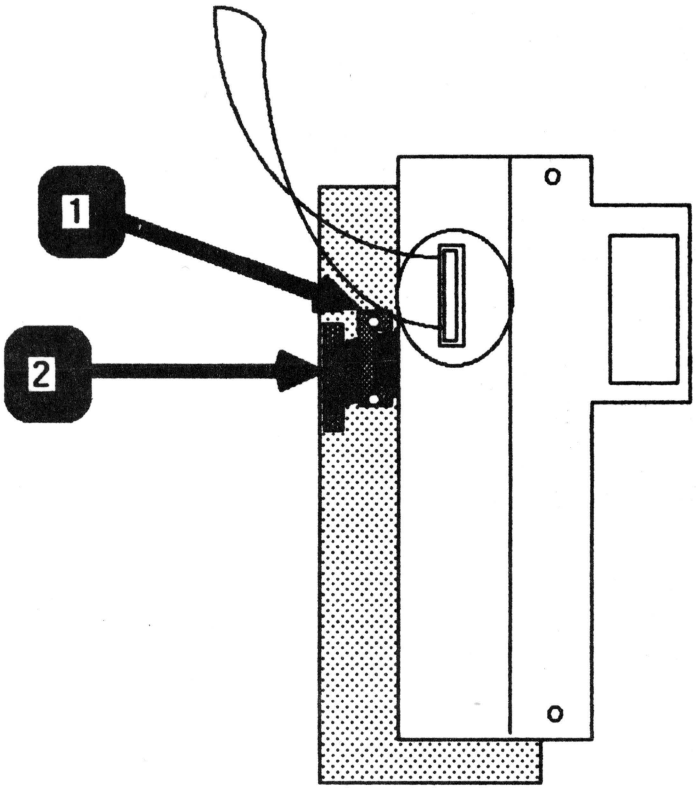

FIGURE 9

Removing the Connector Box

1. Remove the two Phillips screws located at either side of the connector box case.

2. Carefully pry the case open.

3. Remove the two Phillips screws (Figure 8, #1) which secure the metal connector box to the case.

4. Push the DB-15 connector toward the inside of the plastic case until you can grasp the edges of the metal connector box.

5. Use a jeweler's Phillips screwdriver to remove the screws located at either side of the cable clamp (Figure 9, #1).

6. Disconnect the ribbon cable (Figure 9, #2) from the connector box, then lift the box completely out of the case.

Installing the Connector Box

1. Connect the ribbon cable to the socket at the bottom of the metal connector box. Push the connector down into the socket as far as it will go. (See Figure 9, #2.)

2. Replace the cable clamp as shown in Figure 9, #1.

3. Place the connector box inside the case so that the DB-15 connector protrudes through the opening at the bottom of the case.

4. Replace the screws (Figure 8, #1) to secure the connector box to its plastic case.

5. Place the rear panel on the case and press until it snaps into place.

6. Replace the Phillips screws on both sides of the case.

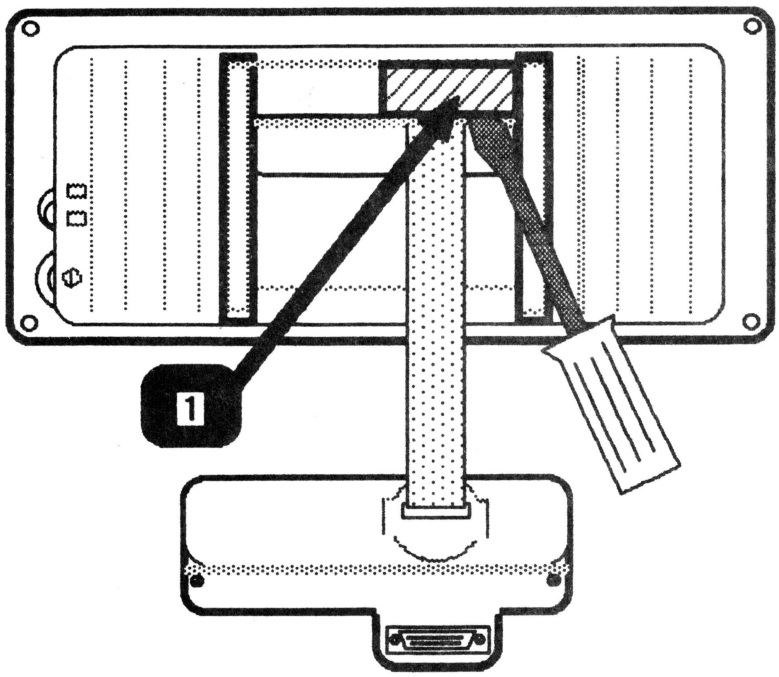

FIGURE 10

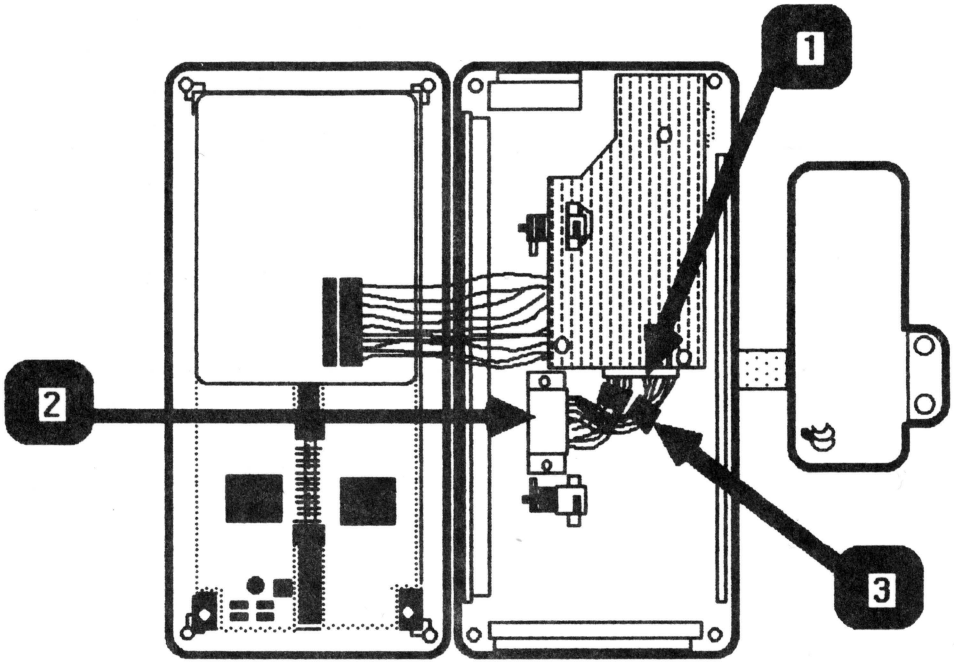

FIGURE 11

Removing the Ribbon Cable

1. Place the Flat Panel Display face down on a protective foam pad and orient it as shown in Figure 10.

2. Use a flatblade screwdriver to pry off the flat panel cable brace (Figure 10, #1).

3. Follow the steps listed under "Opening the Flat Panel Display Case".

4. Disconnect the ribbon cable connector (Figure 11, #1) from the contrast card.

5. Remove the two Phillips screws which secure the ribbon cable clamp (Figure 11, #2) to the Flat Panel Display case. Lift the clamp off the plastic alignment posts.

IMPORTANT: IF THERE ARE TWO TOROID RINGS ON THE RIBBON CABLE AS SHOWN IN THE FIGURE 11, #3, CAREFULLY SQUEEZE THE RINGS (ONE AT A TIME) WITH A PAIR OF PLIERS UNTIL THE RINGS BREAK OFF THE CABLE.

6. Slide the cable out through the opening in the back case of the flat panel.

7. Follow the steps listed under "Removing the Connector Box".

8. Slide the toroid ring (Figure 12, #1) over the connector box cable and set it aside.

9. Use a small flatblade screwdriver to pry the sides of the plastic cable brace (Figure 12, #2) until it is free from the case.

10. Slide the ribbon cable out (toward the inside of the case) through the opening in the connector box case.

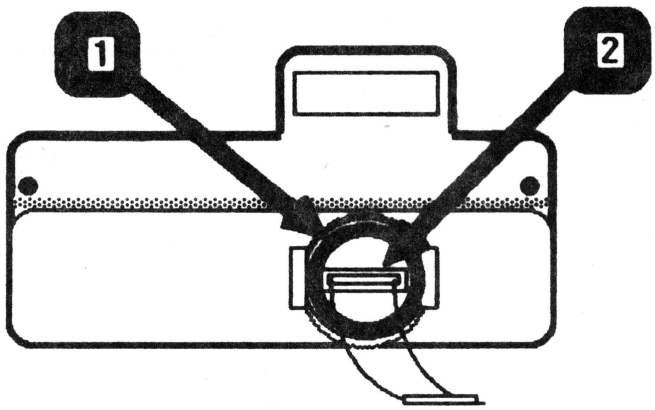

FIGURE 12

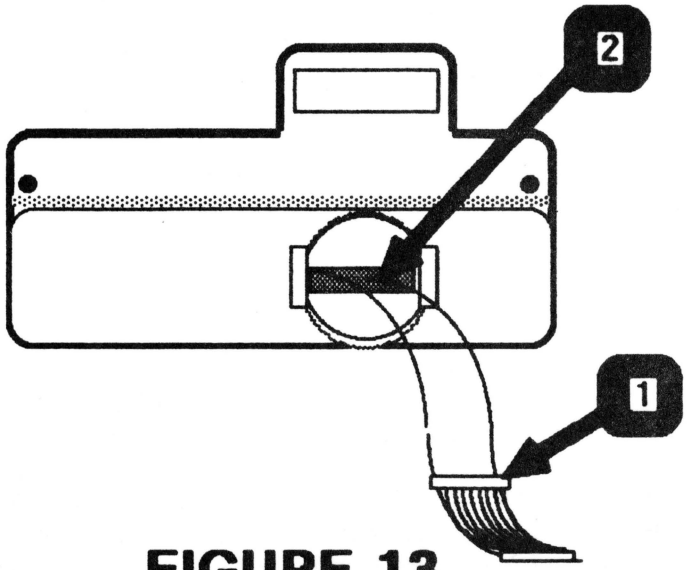

FIGURE 13

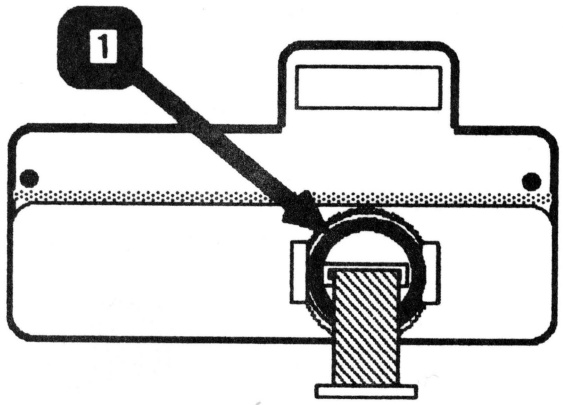

FIGURE 14

Installing the Ribbon Cable

1. Slip the end of the ribbon cable (without the plastic cable brace) through the opening on the inside of the connector box case. (See Figure 13.)

   Pull the cable through the connector box case until the plastic cable brace (Figure 13, #1) meets the slot (Figure 13, #2) on the inside of the case.

2. Push the plastic cable brace into its fitting (slot) until it is snug.

   NOTE: The back side of the plastic cable brace should protrude through the outside of the connector box case.

3. Slip the the toroid ring (Figure 14, #1) back over the ribbon cable.

4. Follow the steps listed under "Installing the Connector Box".

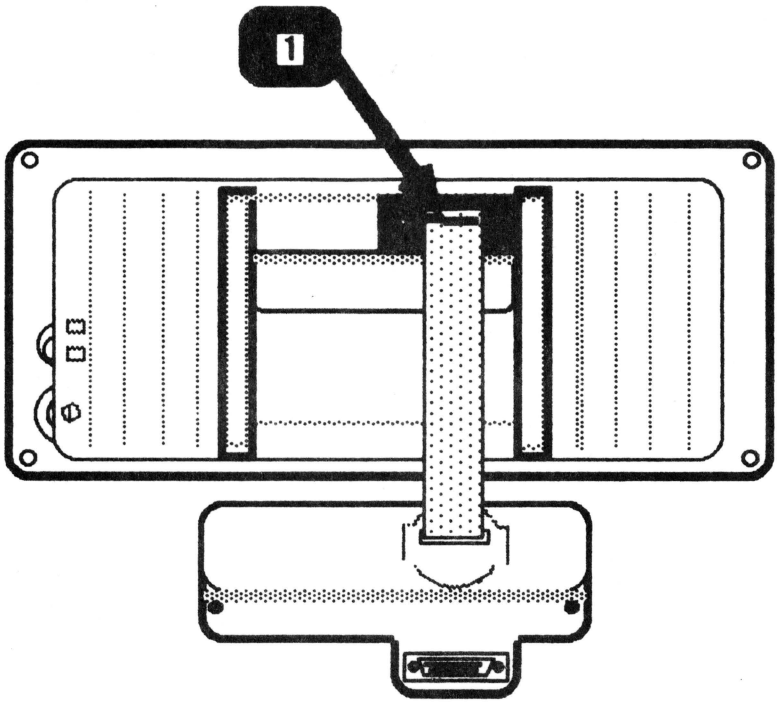

FIGURE 15

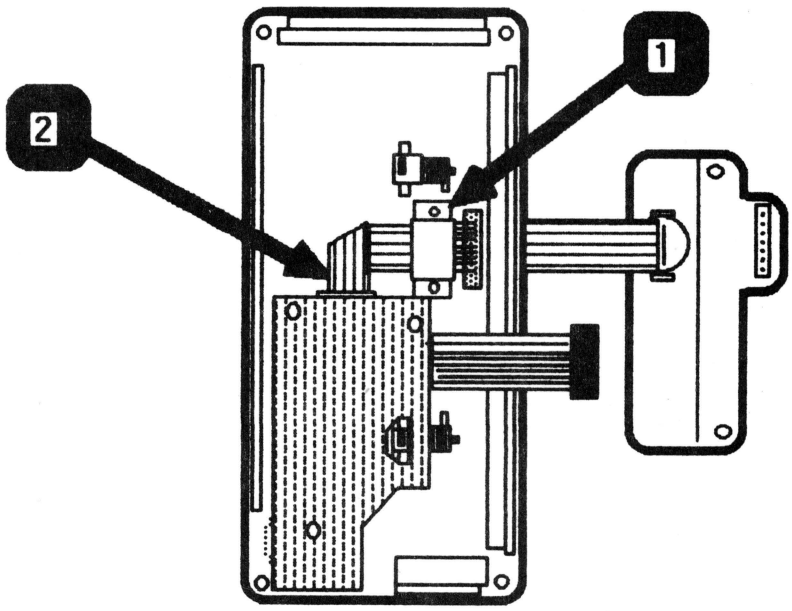

FIGURE 16

6. Orient the connector box and the back of the flat panel case as shown in Figure 15.

7. Slide the other end of the ribbon cable through the opening in the back of the flat panel case. Pull the cable through until the metal clamp on the insulation (white rubber coat) is just inside the opening in the case. (See Figure 15, #1).

   NOTE: The connector box should no more than 1/2 inch away from the flat panel.

8. Snap the plastic cable brace back into place on the back of the flat panel. (See Figure 10, #1.)

9. Flip the back side of the flat panel over and replace the metal cable clamp (Figure 16, #1).

10. Connect the ribbon cable to the contrast card as shown in Figure 16, #2.

11. Follow steps 4 through 8 of "Installing the Liquid Crystal Display (LCD)" to reconnect the LCD and close the flat panel display case.

FLAT PANEL DISPLAY

Item	Part No.	Description
1	076-8128	Flat Panel Display, LCD
2	661-0281	Contrast Card, Flat Panel Display
3	936-0015	Cable, Assembly
4	661-0282	Connector Box, Flat Panel Display
5	815-0884	Case, Front FPD

APPLE COLORMONITOR IIe/IIc TECHNICAL PROCEDURES

TABLE OF CONTENTS

Section 0 - Service Notes

Upgrade Procedure for Fuse F901 (to 4 Amp 125V).....0.5

Section 1 - Basics

General Information.....1.3
Safety Precautions.....1.5
Disposing of the Cathode Ray Tube (CRT).....1.6

Section 2 - Troubleshooting

Introduction.....2.2
Troubleshooting Guide.....2.3

Section 3 - Take-Apart

Series "S"

Removing the Rear Cover (IIc only).....3S.3
Removing the Rear Cover (IIe only).....3S.5
Discharging the Cathode Ray Tube (CRT).....3S.7
Removing and Replacing Procedures:
Main Logic PCB.....3S.9
Power Supply/Panel/AC Cord Assembly.....3S.17
Cathode Ray Tube (CRT).....3S.19
Control PCB.....3S.21
White Only Switch.....3S.23
On/Off Switch (IIc only).....3S.25
On/Off Switch (IIe only).....3S.27
Power Supply Fuse (F871).....3S.29
Replacing the Rear Cover (IIc only).....3S.31
Replacing the Rear Cover (IIe only).....3S.33

CONTINUED ON NEXT PAGE

©Apple Computer, Inc., 1986.
No part of this document may be reproduced in any form without the written permission of Apple Computer, Inc.

Apple and the Apple logo are registered trademarks of Apple Computer, Inc.

Section 3 - Take-Apart (CONTINUED)

Series "H"

Removing the Rear Cover (for IIc).....3H.3
Removing the Rear Cover (for IIe).....3H.5
Discharging the Cathode Ray Tube (CRT).....3H.7
Removing and Replacing Procedures:
Main Logic PCB.....3H.9
Cathode Ray Tube (CRT).....3H.21
LED Assembly (for IIc).....3H.25
LED Assembly (for IIe).....3H.27
Logic Board Fuses (F901 and F902).....3H.29
Replacing the Rear Cover (for IIc).....3H.31
Replacing the Rear Cover (for IIe).....3H.33

Rev. B Logic Board Replacement (Temporary Procedure)
Introduction.....3H.35
Removing the Main Logic Board Assembly.....3H.37
Removing the AC Power Cord and Back Panel.....3H.37
Preparing the Rev. A Logic Board Service Module...3H.39
Installing the Rev. B Rear Panel & Power Cord on the Rev. A Main Logic Board Service Module..3H.41
Installing the Prepared Rev. A Main Logic Board Module in the Rev. B Chassis.....3H.42

Rev. A Logic Board Replacement (Temporary Procedure)
Insert here purged pages 3H.7-20 (Nov 85).

Section 4 - Adjustments

Introduction.....4.3
Text (Black & White) Adjustments.....4.5
Color Adjustments
Materials Needed.....4.7
Adjustment Procedure Series "S".....4.7
Adjustment Procedure Series "H".....4.11

Section 5 - Illustrated Parts List

ColorMonitor IIe
Series "H".....5.3
Series "S".....5.5
ColorMonitor IIc
Series "H".....5.7
Series "S".....5.9

GENERAL INFORMATION

The Apple® ColorMonitor IIe/IIc is a 14" display monitor operated with a composite video input signal. This means that it uses a standard RCA phono jack to connect the monitor input to the computer's video output jack. The power switch for the ColorMonitor IIc is on right side of the case (when facing the screen) near the top, and will stay depressed when the unit is on (Figure 1, #1). The power switch for the ColorMonitor IIe is at the front of the monitor on the lower right side (Figure 2, #1).

For both case versions of the ColorMonitor, frequently used controls are located behind a protective door (Figure 2, #2) on the front of the monitor, at the bottom. Less frequently used controls are on the back of the monitor. Internationally recognized symbols, shown in Figure 3, are used to identify the various controls.

PRODUCT DIFFERENTIATION

There are two vendors supplying Apple with the ColorMonitor IIe/IIc. These two vendors' products can be distinguished by a quick visual inspection of the hinges on the lower front door of the monitor. "S" Series monitors have two plastic hinges with metal pins. Monitors of the "H" Series have three entirely plastic hinges which bend along a preset crease.

There are two versions of the "H" Series logic board service modules and IIe Series "H" finished goods monitors:

Rev. A	**Rev. B**
Rear panel/AC power cord assembly detaches from logic board (two separate modules)	Power cord soldered to logic board (one module)
Separate power supply board	Logic board design includes power supply and video functions
Separate video board	
Isolation transformer on AC power circuit	**NO ISOLATION TRANSFORMER: DANGEROUS IF PLUGGED IN BACKWARDS!** (See **WARNING**, p. 4.1)

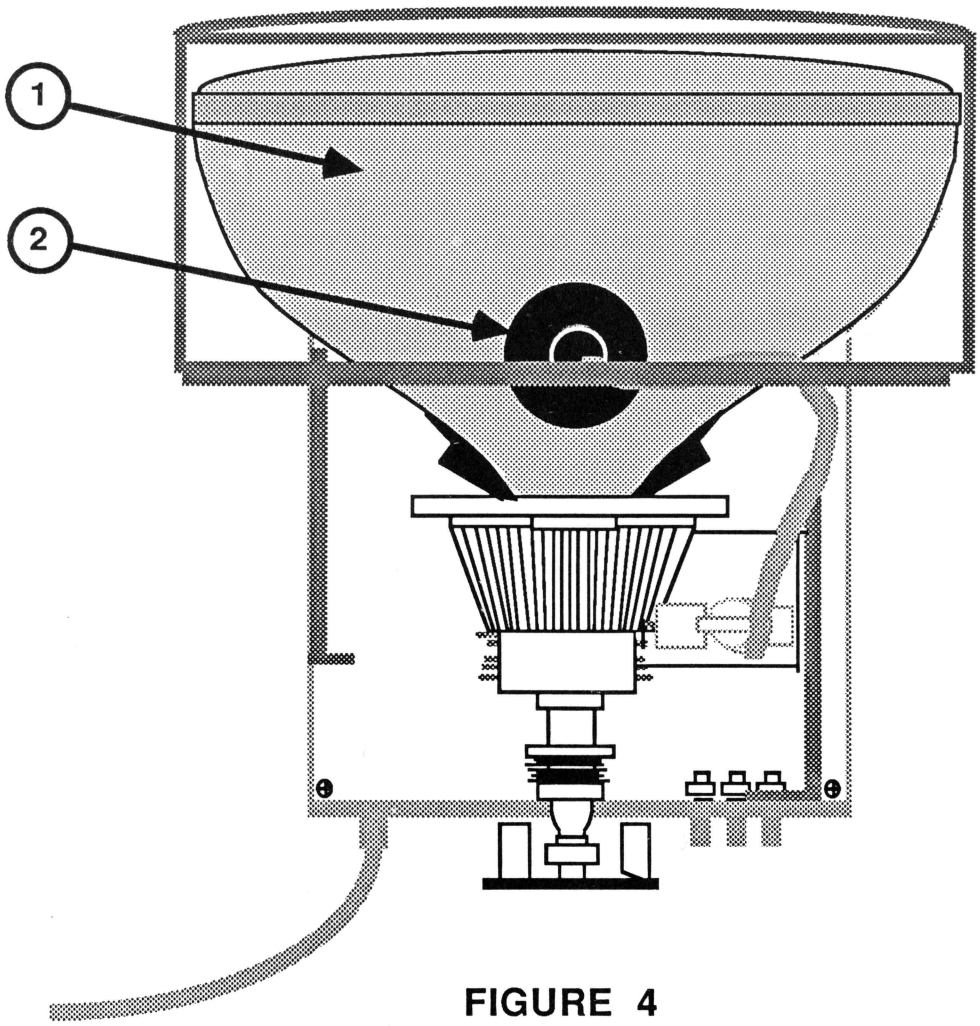

FIGURE 4

SAFETY PRECAUTIONS

1. **EXCEPT WHEN MAKING "LIVE" ADJUSTMENTS, ALWAYS REMOVE THE AC POWER CORD BEFORE WORKING INSIDE THE COLORMONITOR.**

2. **ALWAYS DISCHARGE THE CRT BEFORE REMOVING OR REPLACING ANY INTERNAL PARTS.** The CRT, or Cathode-Ray Tube, (Figure 4, #1) is an extremely dangerous piece of equipment. It runs at 24,000 volts DC and contains a high vacuum. Before touching any internal components you must discharge the CRT. (See **Discharging the CRT.**)

3. **ALWAYS WEAR SAFETY GOGGLES WHEN WORKING WITH A CRT.** Aside from electric shock, the most serious danger in working with CRTs is that you may break the tube and cause it to implode. Since the tube contains a high vacuum, a break can cause the tube to collapse into itself violently, then explode. This will not always happen when the tube is broken, but it is always possible, and you must be prepared for the worst case.

4. **NEVER SUBJECT THE TUBE TO MORE THAN MODERATE PRESSURE, AND NEVER HANDLE A TUBE BY ITS NECK.** To prevent an implosion, you should take every precaution against breaking the tube, especially at the neck, where the tube is the thinnest.

5. **ALWAYS REMOVE ALL RINGS, WRISTWATCHES, BRACELETS, ETC., BEFORE WORKING INSIDE THE MONITOR.** Metal jewelry is an excellent conductor of electricity. Removing jewelry will reduce the possibility of electric shock.

6. **NEVER TOUCH THE ANODE.** Normally the anode has a connector (Figure 4, #2) plugged into it, but when a CRT is replaced, this connector is removed, exposing the anode. The anode can maintain a charge of several thousand volts (even after the power is off).

7. **KEEP ONE HAND IN YOUR POCKET OR BEHIND YOUR BACK WHEN ADJUSTING OR DISCHARGING A LIVE CRT.** This reduces the risk of lethal injury should you accidentally contact high voltage.

8. **NEVER USE A GROUNDING WRISTSTRAP WHILE DISCHARGING A MONITOR OR WHILE MAKING ADJUSTMENTS ON A LIVE MONITOR.** A grounding wriststrap is used to protect sensitive components from the damaging effects of electrostatic discharge from your body or clothing. Because a wriststrap is designed to carry a charge, however small, it may safely be used ONLY when working on "dead" (uncharged) equipment.

DISPOSING OF THE CATHODE RAY TUBE (CRT)

Since the CRT contains a high vacuum, a break can cause the tube to collapse into itself violently and then explode. So, before you dispose of a defunct CRT, it must be devacuumed. The procedures for devacuuming the Apple ColorMonitor CRT are as follows:

1. Put on a pair of safety goggles.

2. Pull off the black plastic guide located at the end of the CRT neck.

3. Use a pair of sharp diagonal cutters to carefully clip off the connector pins from which the plastic guide was removed.

4. Locate a thick cardboard box large enough to completely conceal the CRT.

5. Cut or drill a hole in the side of the box, just large enough to insert the very tip of the CRT neck through. The hole should be about six inches from the bottom.

6. Place the CRT inside the box with the tip of the neck protruding through the hole, and tape the box flaps down with a strong tape, preferably duct tape. (Diagram below.)

   WARNING: ONLY THE VERY TIP OF THE CRT NECK SHOULD BE PROTRUDING THROUGH THE HOLE IN THE BOX. THE BOX MUST NOT HAVE ANY OTHER OPENINGS!

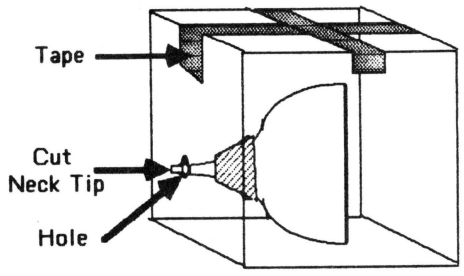

7. Standing to one side, use a pair of diagonal cutters to snip off the very tip of the CRT neck protruding through the hole.

   WARNING: DO NOT LOOK DIRECTLY AT THE BOX WHEN SNIPPING OFF THE NECK TIP!

SYMPTOM	ACTION
NO RASTER	Adjust the external BRIGHTNESS control on front panel. **Series "S"** - Check fuse 871 on the power supply PCB; replace if blown. **Series "H"** - Check fuse 901 on the main logic board; replace if blown. Check that all connectors are secure on power supply and main logic PCBs. **Series "S"** - Replace power supply board. **Series "S"** - Replace rear panel/AC cord. Replace main logic PCB. Replace power switch. Replace CRT.
ONE HORIZONTAL LINE APPEARS	**Series "S"** - Check to make sure that the internal service switch (SW800) is in NORMAL position. Refer to Series "S" color adjustment procedure (in "Adjustments" section) for switch location. Check yoke connector. Replace main logic PCB. Replace CRT.
ONE VERTICAL LINE APPEARS	Check yoke connector. Replace main logic PCB. Replace CRT.
ONE SIDE OF THE RASTER IS A DIFFERENT HEIGHT THAN THE OTHER (keystone effect)	Replace CRT.

SYMPTOM	ACTION
ABNORMAL RASTER (other than above)	Check to make sure all connectors are correctly seated and in right places on the PCBs. Replace main logic PCB.
HORIZONTAL LINEARITY BAD	Replace main logic PCB.
MONITOR MAKES HIGH PITCHED NOISE	Replace main logic PCB. **Series "S"** - Replace power supply board.
RASTER IS SMALL AND ABNORMALLY BRIGHT	Check yoke connector. Replace main logic PCB. Replace the CRT.
NO VERTICAL SYNCHRONIZATION	Set external VERTICAL HOLD control on back panel. Replace main logic PCB.
RASTER NOT CENTERED	Replace main logic PCB.
CAN'T ADJUST COLOR, CONTRAST, BRIGHTNESS, ETC.	Replace main logic PCB.
CHARACTERS JITTER	Make sure all ground straps are secure. Verify adjacent computer equipment is properly grounded. **Series "S"** - Replace power supply PCB. Replace main logic PCB.
VERTICAL LINEARITY BAD	Replace main logic PCB.
BLACK SPOT REMAINS WHEN UNIT IS OFF (burnt phosphor)	Replace CRT.

Apple ColorMonitor IIc/IIe
Technical Procedures

Section 3

Take-Apart

Series "H"

Contents:

Removing the Rear Cover (for IIc).....3H.3
Removing the Rear Cover (for IIe).....3H.5
Discharging the Cathode Ray Tube (CRT).....3H.7
Removing and Replacing Procedures:
  Main Logic PCB.....3H.9
  Cathode Ray Tube (CRT).....3H.21
  LED Assembly (for IIc).....3H.25
  LED Assembly (for IIe).....3H.27
  Logic Board Fuses (F901 and F902).....3H.29
Replacing the Rear Cover (for IIc).....3H.31
Replacing the Rear Cover (for IIe).....3H.33

Rev. B Logic Board Replacement (Temporary Procedure)*
  Introduction.....3H.35
  Removing the Main Logic Board Assembly.....3H.37
  Removing the AC Power Cord and Back Panel.....3H.37
  Preparing the Rev. A Logic Board Service Module.....3H.39
  Installing the Rev. B Rear Panel and Power Cord
    on the Rev. A Main Logic Board Service Module....3H.41
  Installing the Prepared Rev. A Main Logic Board
    Module in the Rev. B Chassis.....3H.42

Rev. A Logic Board Replacement (Temporary Procedure)*
  Insert here purged pages 3H.7-20 (Nov 85).

* These two temporary procedures are to be used only as long as you have unreworked Rev. A logic board service modules in stock. After that time, they may be purged.

NOTE: For Series "S" Take-Apart, see the preceding section, beginning on page 3S.1.

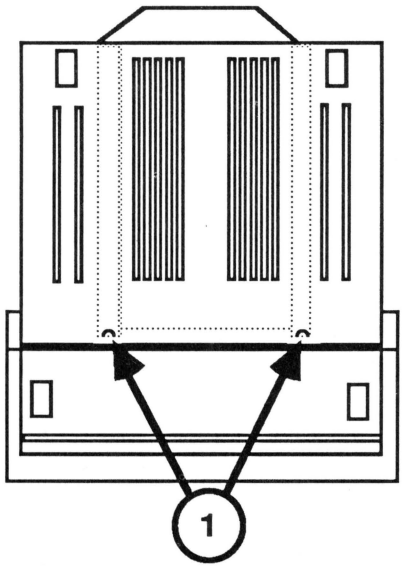

FIGURE 1

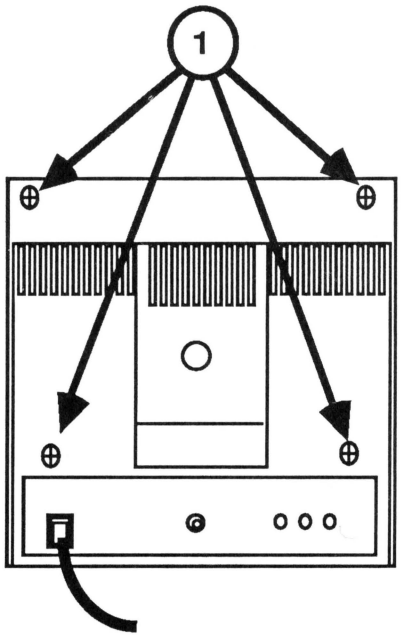

FIGURE 2

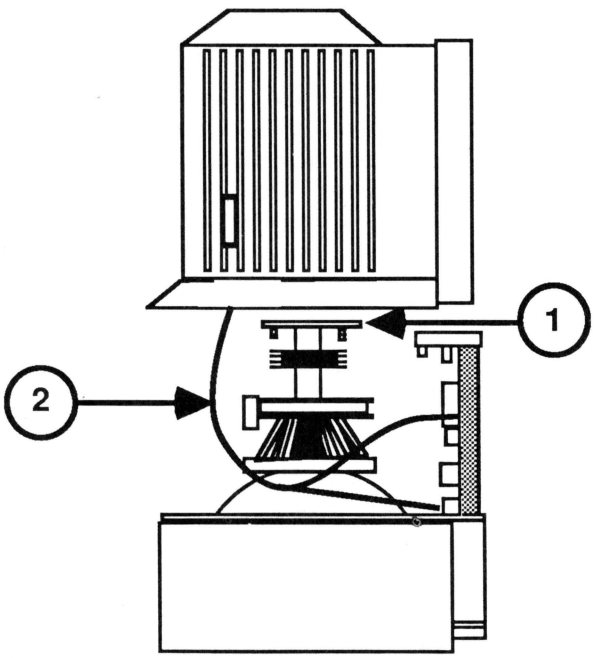

FIGURE 3

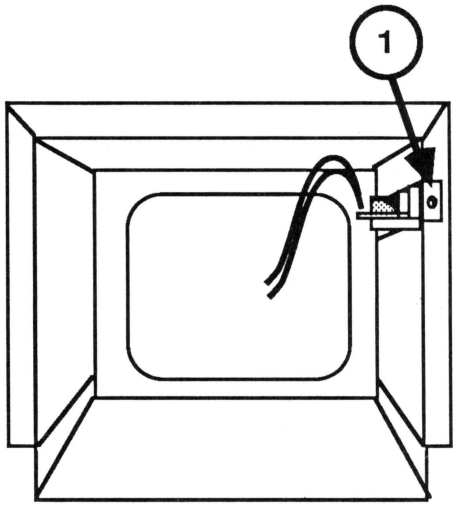

FIGURE 4

DISCHARGING THE CATHODE RAY TUBE (CRT) - Series "H"

1. Turn off the monitor and disconnect the AC power cord.

2. Remove the rear cover. ("See Removing the Rear Cover.")

3. Set the monitor upright, with the back facing you.

4. Remove any metal jewelry (rings, watches, bracelets, hanging necklaces, etc.) and grounding wriststraps.

5. Put on safety goggles.

6. Attach one end of an alligator lead to a long flatblade screwdriver, two inches from the insulated handle. Attach the other end to any part of the metal bracket surrounding the power supply board. (Figure 8, #1.)

   WARNING: USE ONLY ONE HAND WHILE DISCHARGING THE CRT. This is to eliminate any chance of your becoming a path for current should your hand slip and touch the metal part of the screwdriver. Grasp only the insulated handle of the screwdriver while discharging the CRT.

7. Slide the screwdriver under the CRT anode cap (Figure 8, #2) and push it towards the center of the cap until the blade contacts the metal anode ring.

   CAUTION: DO NOT USE FORCE. If it is difficult to get the screwdriver under the anode cap, use a smaller screwdriver to loosen the suction of the anode cap on the tube. Discharge the anode by holding the large screwdriver against the anode ring for five seconds.

8. Remove the screwdriver and disconnect it from the alligator clip.

9. Peel back the anode cap until you can see the anode ring at the center. Look at the metal connector in the center of the cap and notice how it is clipped into the CRT. Push on the cap in one direction, freeing the metal connector from the CRT, and lift the cap off the tube.

   NOTE: A secondary charge can build up even after you have discharged the CRT. To ensure that any residual charge is dissipated during the service procedure, establish a ground lead by fastening one alligator clip to the metal chassis and the other clip to the edge of the anode aperture.

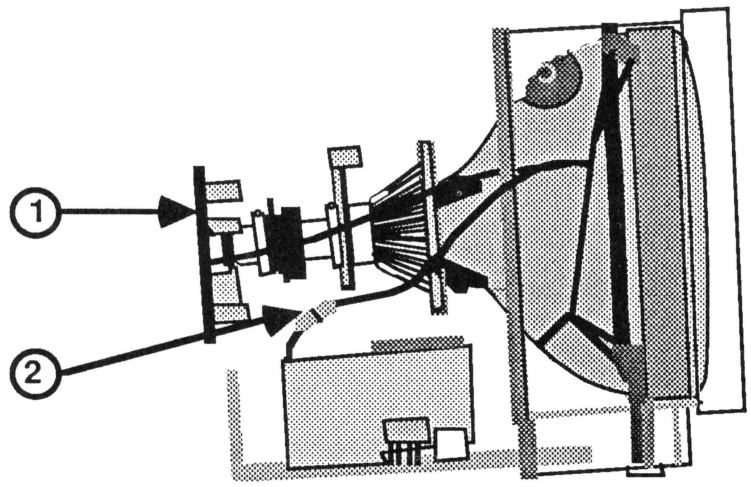

FIGURE 9

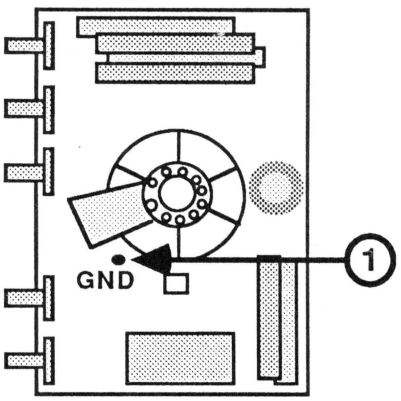

FIGURE 10

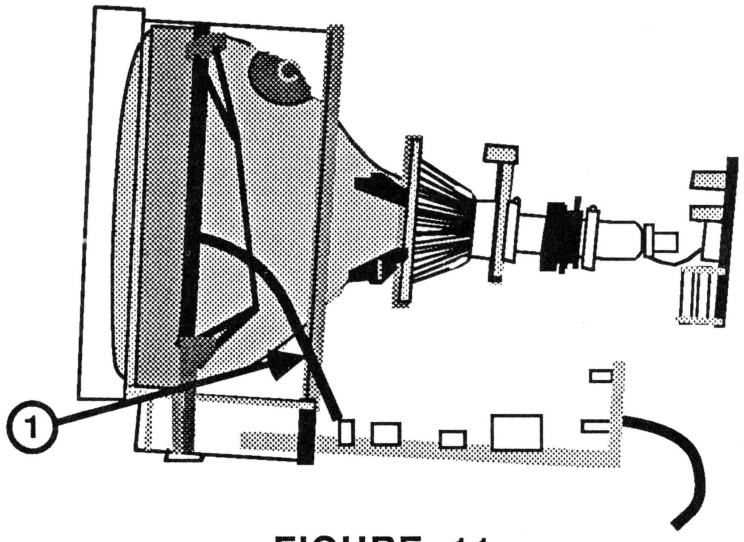

FIGURE 11

REMOVING THE MAIN LOGIC PCB - Series "H"

1. Turn off the monitor and unplug the AC cord.
2. Remove the rear cover. (See "Removing the Rear Cover.")
3. **DISCHARGE THE CRT.** (See "Discharging the Cathode Ray Tube.")
4. Carefully pull the CRT socket board (Figure 9, #1) away from the CRT neck until it clears the neck base.
5. Turn the socket board so that you can see the component side, as shown in Figure 10.
6. Disconnect the gray CRT ground strap from its connection (Figure 10, #1) on the CRT socket board.
7. Disconnect the white CRT ground strap at its plug-in connector (Figure 9, #2).
8. Remove all wires from the plastic cable clamps.
9. Disconnect the degaussing coil ground strap (Figure 11, #1) from connector W on the main logic PCB.

CONTINUED ON NEXT PAGE

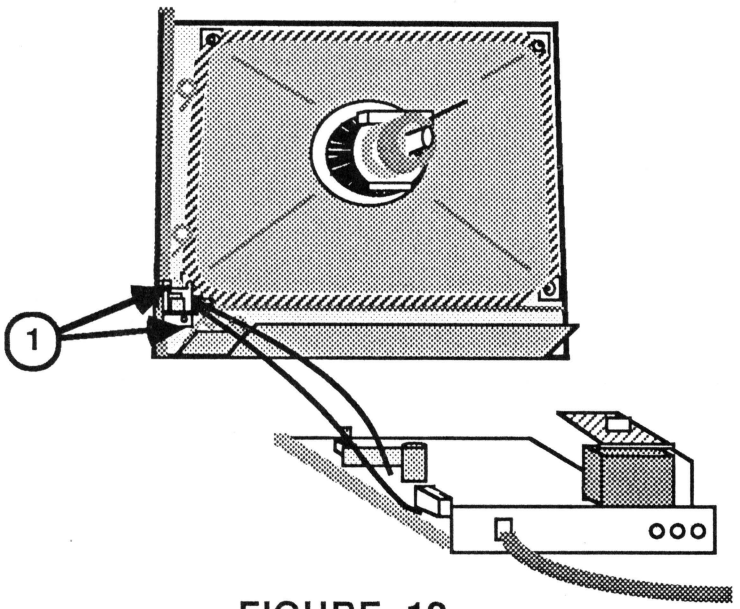

FIGURE 12

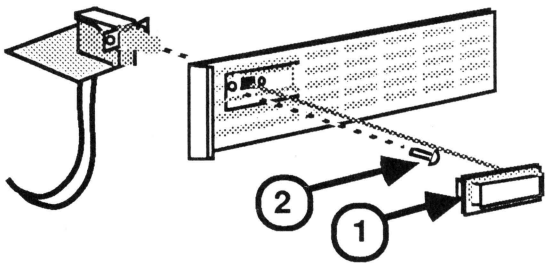

FIGURE 13

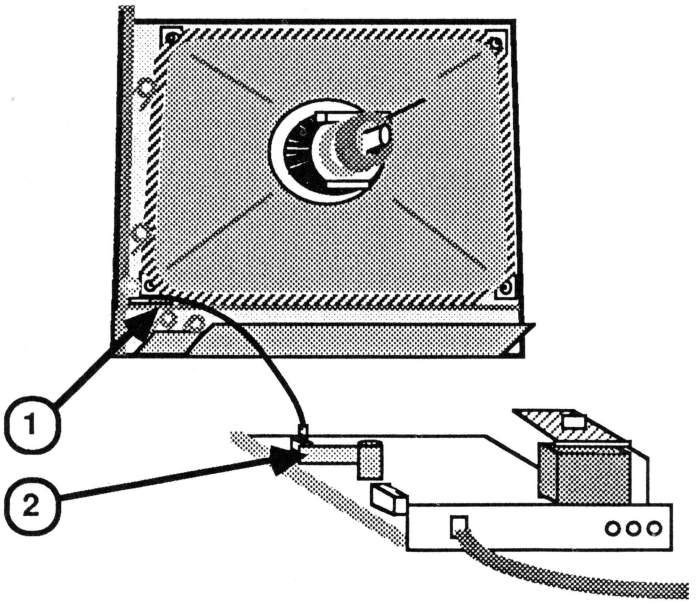

FIGURE 14

10. Disconnect the on/off switch from its bracket.

    For the IIe:

    a. Remove the two screws* that secure the on/off switch bracket to the front bezel (Figure 12, #1).

    b. Pull the switch button* off its shaft.

    c. Remove the two screws* securing the switch assembly to its mounting bracket.*

    For the IIc:

    a. Pull the switch button* (Figure 13, #1) off its shaft.

    b. Remove the screw* (Figure 13, #2) which secures the on/off switch to the plastic bracket.*

11. For the IIe or IIc, Rev. A only:

    Disconnect the LED cable (Figure 14, #1) from the small, vertically mounted video PCB attached to the main logic PCB (Figure 14, #2).

    For the IIe or IIc, Rev. B only:

    Disconnect the LED cable from the main logic PCB.

    NOTE: Rev. B monitors may be identified by the absence of a separate power supply board.

* Save these items for installation on the replacement logic board module. (See **WHAT TO KEEP** and **WHAT TO RETURN** on the next page.)

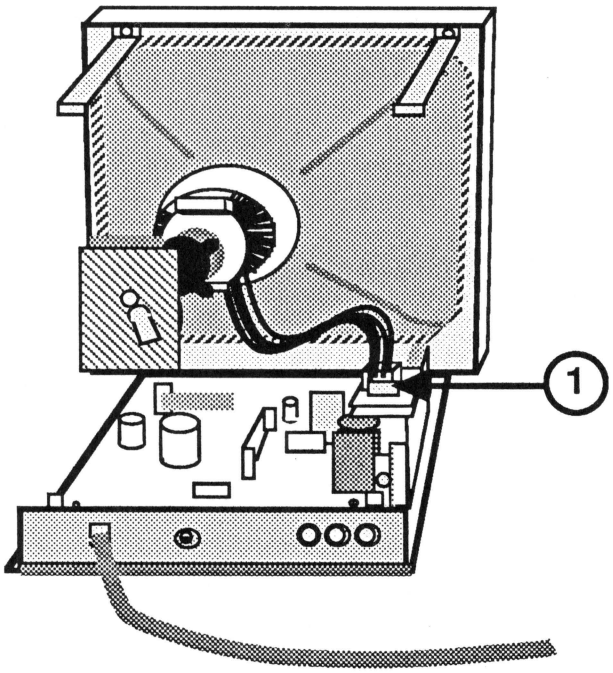

FIGURE 15

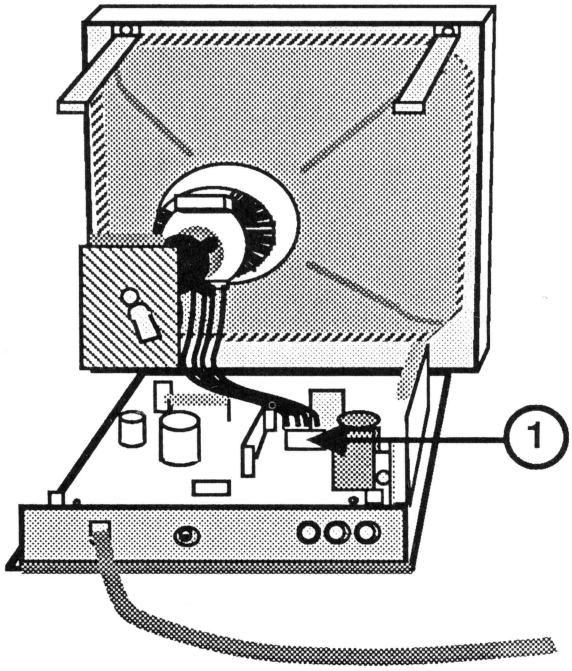

FIGURE 16

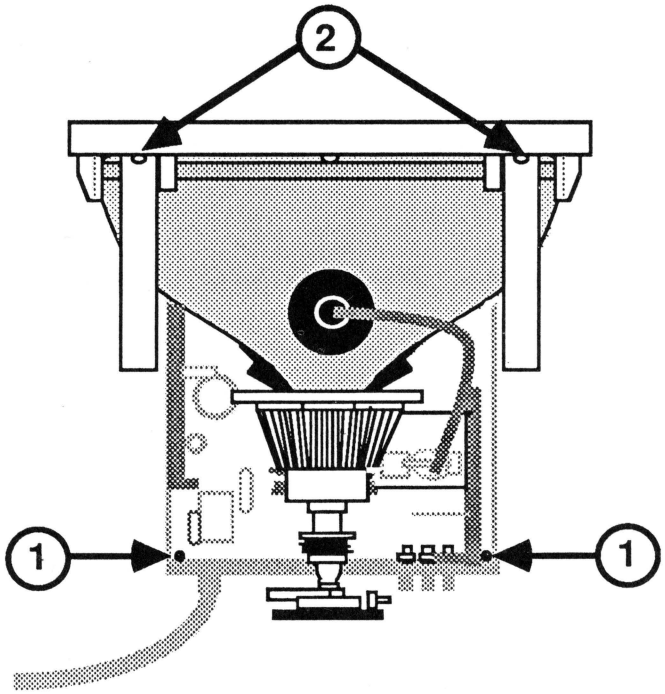

FIGURE 17

12. For the IIe or IIc, Rev. A only:
Disconnect the CRT connector (red/blue/yellow/green) from the power supply board (Figure 15, #1).

For the IIe or IIc, Rev. B only:
Disconnect the CRT connector (red/blue/yellow/green) from the logic board (Figure 16, #1).

13. Slide the main logic board assembly from under the CRT.

14. Remove the five front plastic control knobs.*

CAUTION: Be very careful with the fragile White Only switch (the elongated one). The mounting is easily broken, requiring replacement of the PCB. Use the fingers of one hand to hold the mounting down VERY SECURELY while you pull the switch button off its shank.

15. Remove the three rear control knobs* as follows:
    a. Remove the two screws* (Figure 17, #1) that secure the back panel to the main logic PCB.
    b. Carefully disengage the "teeth" on the bottom of the panel from the openings on the metal chassis.
    c. Taking care not to put tension on the AC power cord connection, move the right side of the rear panel away from the three plastic control knobs on the logic board.
    d. Remove the three rear plastic control knobs from the logic board.

16. For Rev. A only, remove the two screws* holding the two upper case support brackets* to the bezel (Figure 17, #2).

* Check below to determine which model- or color-specific items to keep with the customer's unit and which should be sent back to Apple.

WHAT TO KEEP: Keep the following items to install on the replacement main logic board assembly:
1. Control knobs (five front, three rear, one power)
2. IIe metal on/off switch bracket
3. IIc plastic on/off switch bracket
4. All screws

WHAT TO RETURN: The following items **MUST** be returned to Apple with the logic board:
1. Uninsulated IIe upper case support brackets (Rev. A only)
2. IIe extension bracket (located between the IIe main logic board and the control PCB)
3. Rear panel and AC power cord (now part of the logic board assembly).

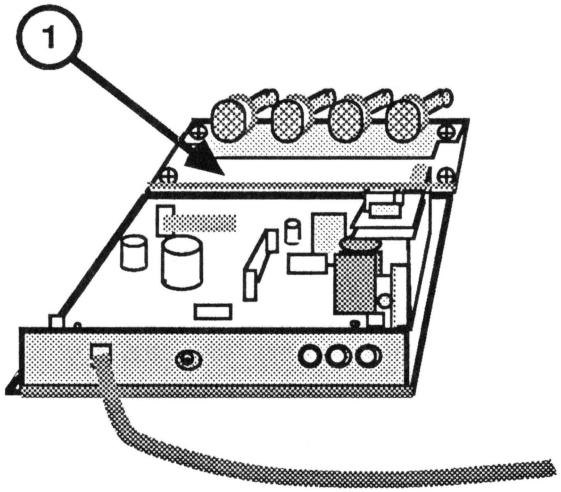

FIGURE 18

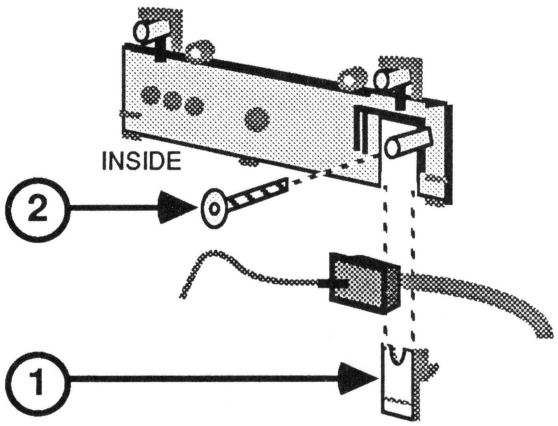

FIGURE 19

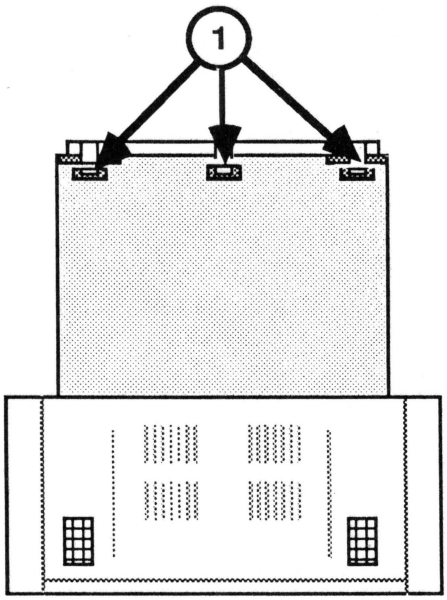

FIGURE 20

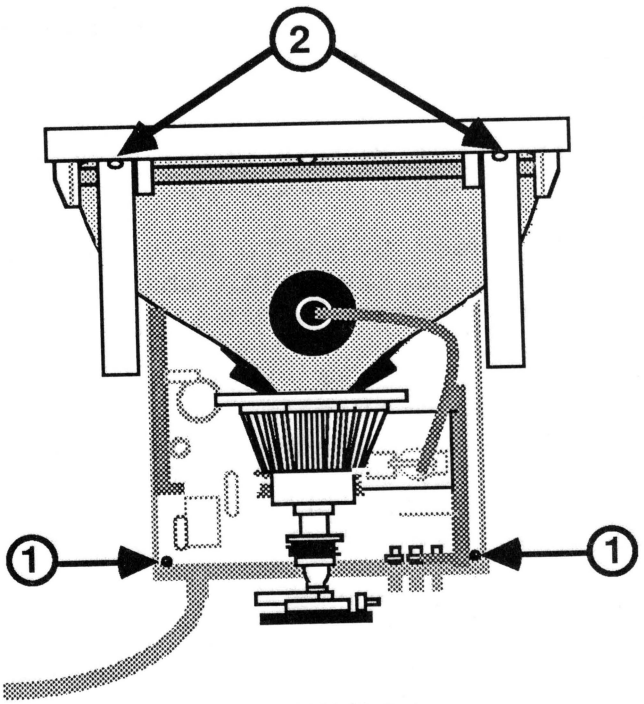

FIGURE 21

REPLACING THE MAIN LOGIC PCB - Series "H"

NOTE: If you are installing a replacement main logic PCB module in the ColorMonitor IIe, you must first install an extension bracket between the main logic PCB and the control PCB. (This ensures size compatibility between the entire main logic PCB assembly and the monitor housing.) The extension bracket (with hardware) is included in all Main Logic Board Assembly spares modules. Install the bracket as shown in Figure 18, #1. Then continue to the steps below.

(If you are replacing the main Logic PCB of the ColorMonitor IIc, the bracket is not needed. Return it to Apple with the defective logic board assembly.)

1. Place the customer's three plastic control knobs over the adjustment pots at the back of the main logic PCB module.

2. From the logic board replacement kit, select the appropriately colored rear panel (to match the unit you are repairing) and fit the panel over the AC power cord (Figure 19). Slide the matching small plastic holding piece under the cord, as shown (Figure 19, #1) until it fits securely under the power cord.

3. Replace the screw that holds the power cord in place (Figure 19, #2).

4. Fit the rear panel over the three rear control knobs, making sure the plastic "teeth" on the bottom of the panel fit into the openings in the metal chassis (Figure 20, #1).

5. Replace the two screws (Figure 21, #1) that secure the back panel to the main logic PCB.

6. If you are repairing a Rev. A monitor, install the two new **INSULATED** upper case supports you will find in the logic board replacement kit. To do this, replace the two screws that secure the upper case supports to the top of the bezel (Figure 21, #2).

   WARNING: THESE INSULATED BRACKETS MUST BE INSTALLED WHENEVER YOU PLACE A REV. B LOGIC BOARD SERVICE MODULE IN A REV. A MONITOR CHASSIS. FAILURE TO DO SO CAN RESULT IN A POSSIBLE ELECTROSHOCK HAZARD FOR THE USER.

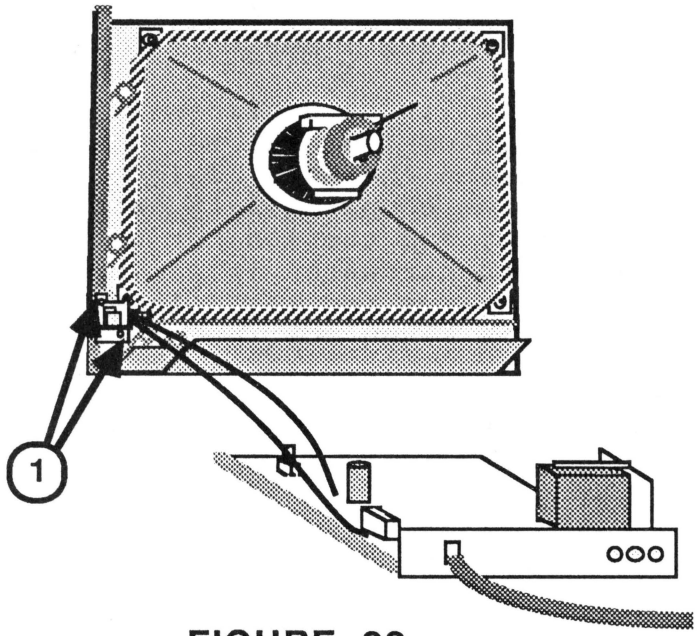

FIGURE 22

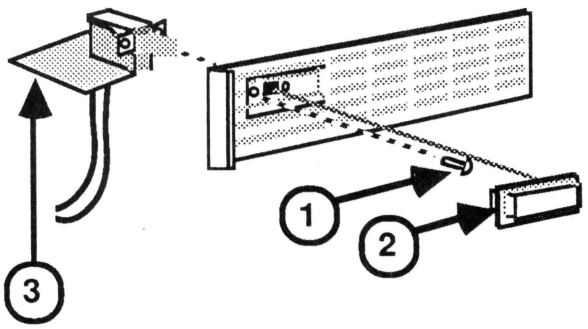

FIGURE 23

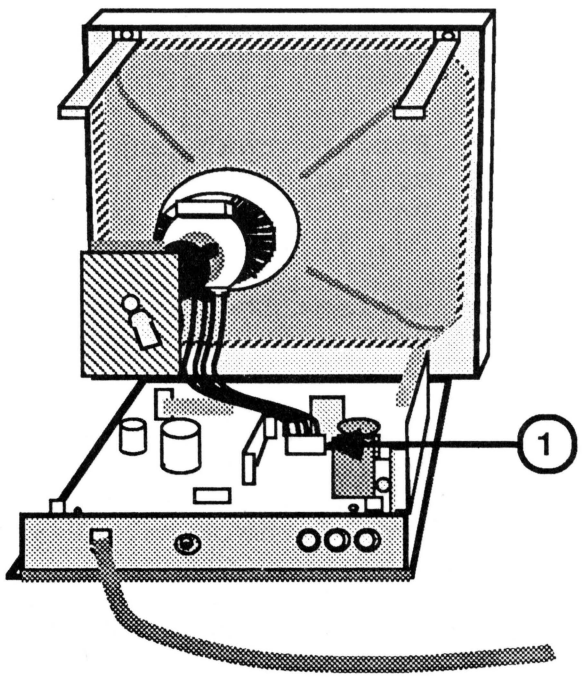

FIGURE 24

7. Replace the customer's five front plastic control knobs on the logic board adjustment pots.

8. With the front bezel (with CRT) on its feet, slide the main logic board under the CRT neck about three inches away from the base of the CRT.

9. Reconnect the on/off switch:

   For the IIe:
   a. Replace the two screws securing the switch assembly to its mounting bracket.
   b. Replace the customer's switch button on its shaft.
   c. Replace the two screws which secure the on/off switch to the front bezel (Figure 22, #1).

   For the IIc:
   a. Replace the screw (Figure 23, #1) which secures the on/off switch to the plastic bracket. The small switch PCB (Figure 23, #3) is on the bottom as you insert the switch unit into the plastic bracket.
   b. Replace the customer's switch button (Figure 23, #2) on its shaft.

10. For the IIe or IIc, Rev. A service module only:
    Reconnect the CRT connector (red/blue/yellow/green) to the power supply board.

    For the IIe or IIc, Rev. B service module only:
    Reconnect the CRT connector (red/blue/yellow/green) to the logic board (Figure 24, #1).

    CAUTION: Be sure that this and all connector wires are placed under the CRT neck.

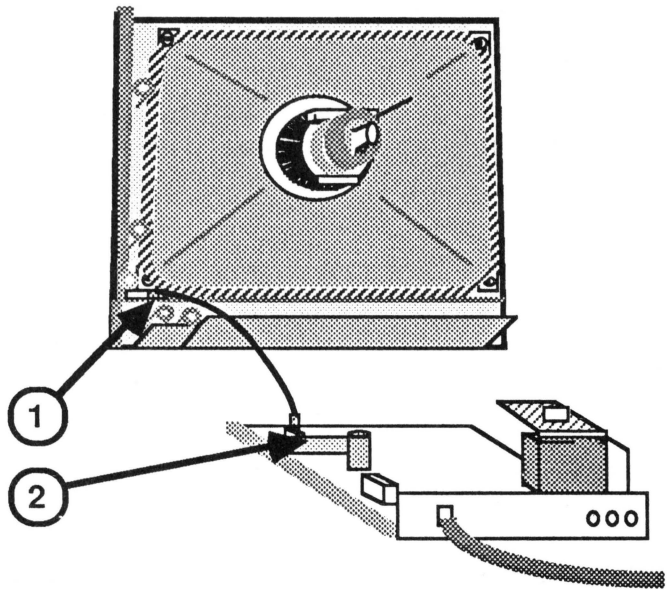

FIGURE 25

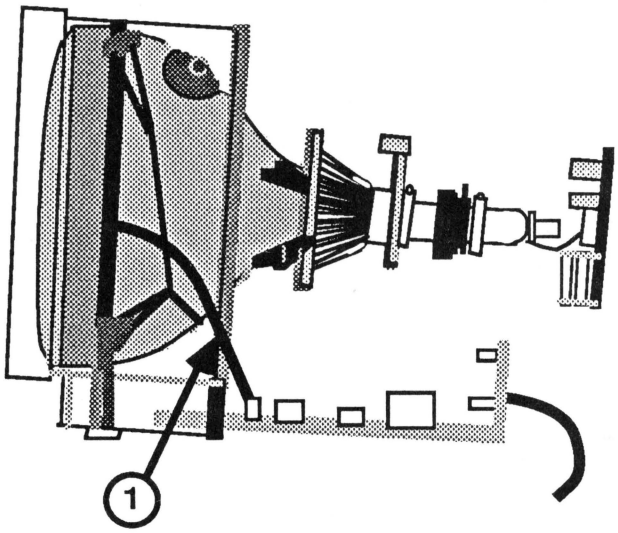

FIGURE 26

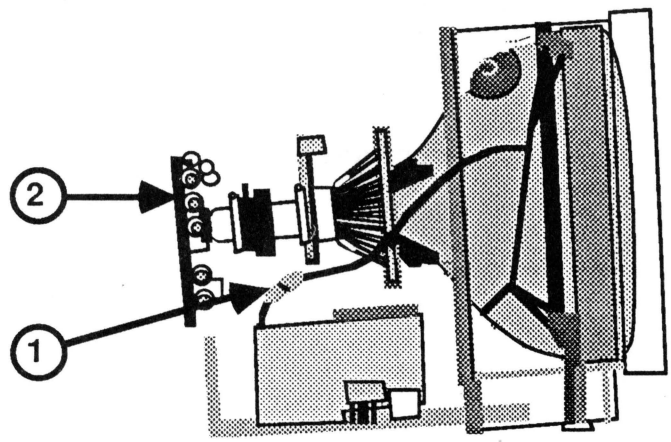

FIGURE 27

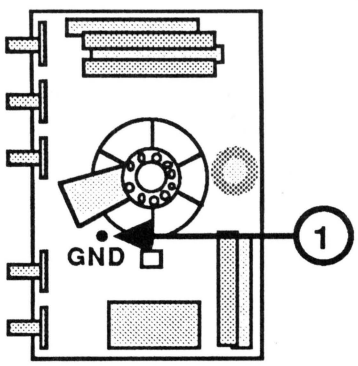

FIGURE 28

11. For the IIe or IIc, Rev. A service module only:
Reconnect the LED cable (Figure 25, #1) to the small, vertically mounted video PCB attached to the main logic PCB (Figure 25, #2).

    For the IIe or IIc, Rev. B service module only:
Reconnect the LED cable to the main logic PCB.

12. Slide the main logic PCB into the front bezel so that the control knobs fit through the holes in the front of the unit. (**In order for the main logic assembly to now fit into the IIe bezel, you must have installed the extension bracket, as directed in the NOTE at the beginning of this procedure.**)

13. Reconnect the degaussing coil ground strap to connector W on the main logic PCB (Figure 26, #1), making sure the "W" on the side of the connector is matched to the "W" on the logic board.

14. Reconnect the white CRT ground strap at its plug-in connector (Figure 27, #1).

15. Reconnect the gray CRT ground strap to the CRT socket board (Figure 28, #1).

16. Reconnect the CRT socket board to the CRT neck (Figure 27, #2). It fits only one way.

17. Replace the anode cap. (See "Discharging the Cathode Ray Tube.")

18. Replace the rear cover. (See "Replacing the Rear Cover.")

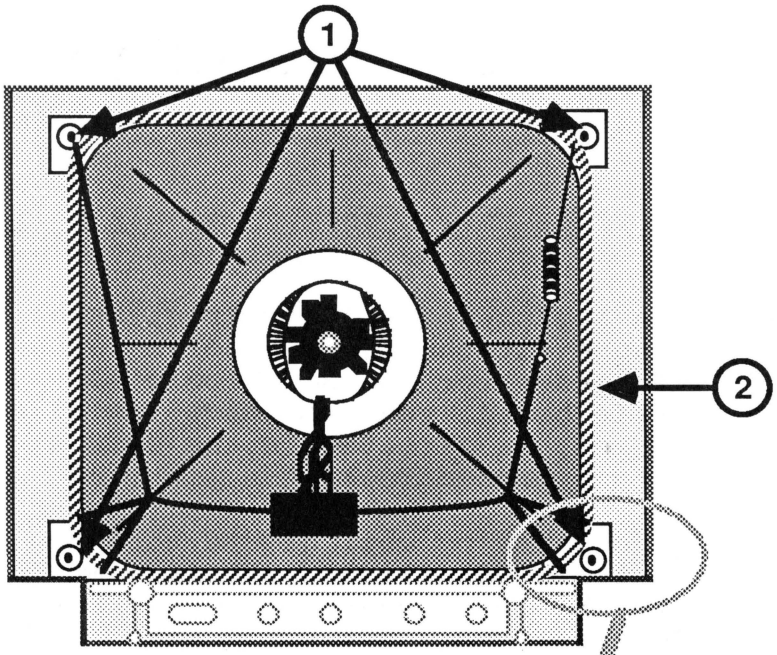

FIGURE 29

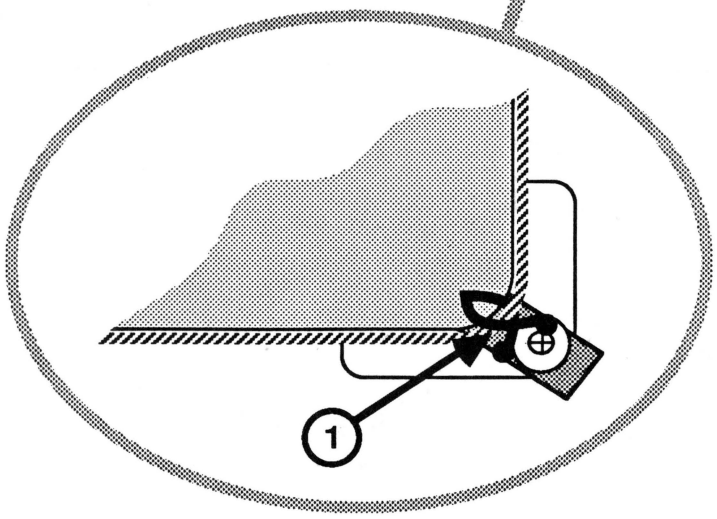

FIGURE 30

REMOVING THE LED ASSEMBLY (IIe ColorMonitor only) - Series "H"

1. Turn off the monitor and disconnect the AC cord.

2. Remove the rear cover. (See "Removing the Rear Cover.")

3. **DISCHARGE THE CRT.** (See "Discharging the Cathode Ray Tube.")

4. For Rev. A only:
   Disconnect the LED cable from the small, vertically mounted video PCB attached to the main logic PCB (Figure 34, #1).

   For Rev. B only:
   Disconnect the LED cable from the main logic PCB.

5. Pull off the clear plastic cap (Figure 35, #1) that secures the LED to the front bezel.

6. Pull the LED free from the front bezel.

REPLACING THE LED ASSEMBLY (IIe ColorMonitor only) - Series "H"

1. Position the LED assembly in its appropriate place inside the front bezel (Figure 35, #2).

2. Replace the clear plastic cap (Figure 35, #1) that secures the LED to the front bezel.

3. For Rev. A only:
   Reconnect the LED cable to the small, vertically mounted video PCB attached to the main logic PCB (Figure 34, #1).

   For Rev. B only:
   Reconnect the LED cable to the main logic PCB.

4. Replace the rear cover. (See "Replacing the Rear Cover.")

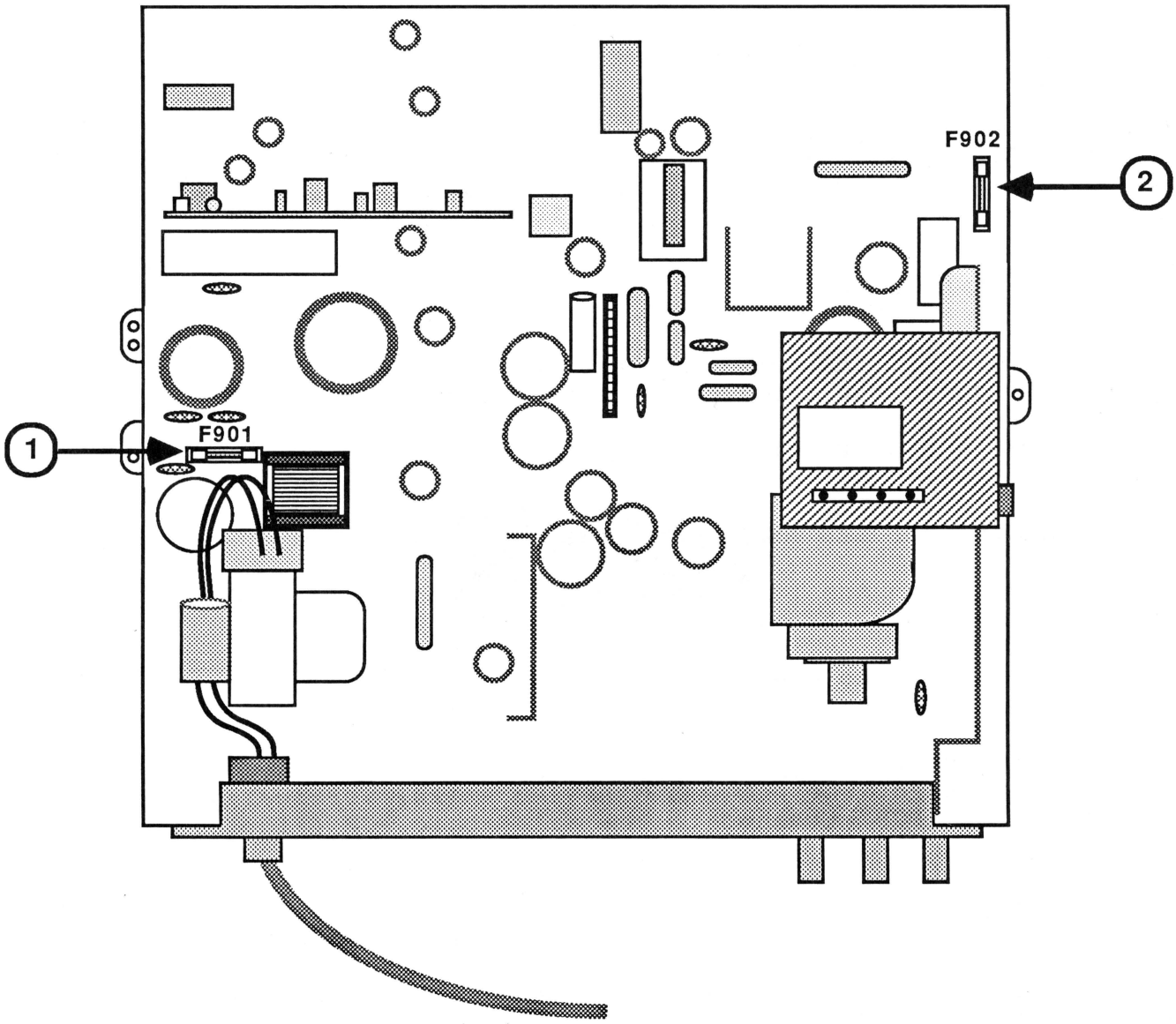

FIGURE 36

ColorMonitor IIe "Series H" Rev. B

Temporary Logic Board & Rear Panel/AC Power Cord Replacement Procedure

Introduction

Revision B of the ColorMonitor IIe - Series H monitors reached the retail channel in mid-June, 1986. There are some significant differences between the new version and the original (herein termed Rev. A), which was released in September, 1985. On the original Rev. A monitor, the main logic board (661-0317) and the rear panel/AC power cord assembly (949-0027) were separate modules. On the Rev. B monitors, the AC power cord is soldered directly to the logic board. Rev. B of the logic board service modules will reach the retail channel in August. Rev. A logic board service modules that are returned to Apple will be reworked and released with the power cord soldered directly to the board.) Below are the possible repair situations you may have.

For repairing a Rev. B monitor with:	Use this procedure:
1. Rev. B logic board module	ColorMonitor IIe/IIc Take-Apart Aug 86 (pp. 3H.8-19)
2. Reworked Rev. A logic board module (with soldered power cord)	ColorMonitor IIe/IIc Take-Apart Aug 86 (pp. 3H.8-19)
3. Unreworked Rev. A logic board module (without power cord)	This temporary procedure (pp. 3H.35-42)

For repairing a Rev. A monitor with:	Use this procedure:
1. Rev. B logic board module	ColorMonitor IIe/IIc Take-Apart Aug 86 (pp. 3H.1-33)
2. Reworked Rev. A logic board module (with soldered power cord)	ColorMonitor IIe/IIc Take-Apart Aug 86 (pp. 3H.1-33)
3. Unreworked Rev. A logic board module (without power cord)	ColorMonitor IIe/IIc Take-Apart Nov 85 (pp. 3H.8-19)*

* Please save the purged pages from the Nov 85 take-apart procedures and insert them behind this temporary addendum. Keep the old Nov 85 procedure and this temporary procedure as long as you have any unreworked Rev. A logic board service modules in stock.

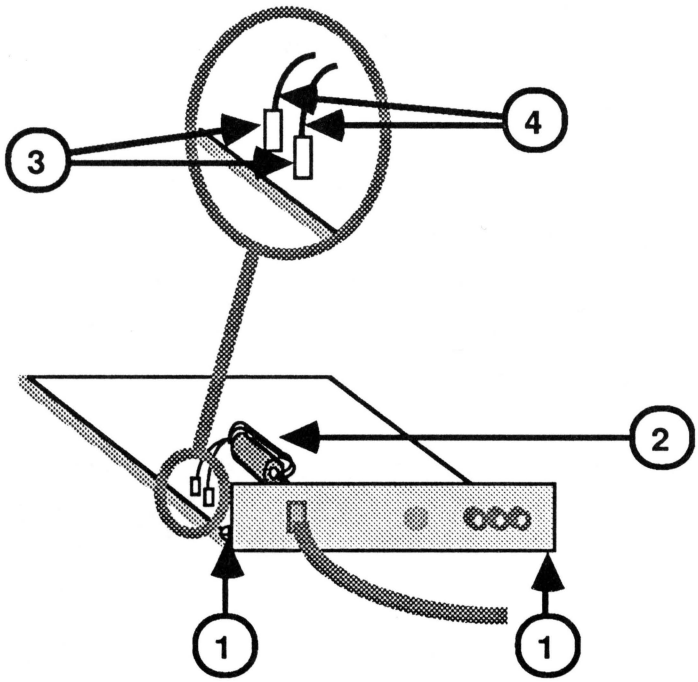

FIGURE 44

If you have only unreworked Rev. A service stock and you need to repair a Rev. B monitor, you must do one of the following:

1. Use two service modules (the Rev. A Main Logic PCB module and the Rev. A Rear Panel/AC Power Cord Assembly),
   OR
2. Cut the power cord off the faulty Rev. B unit and solder it to the Rev. A logic board service module, as described in the following temporary procedure. For the following procedure, refer as noted to the *Technical Procedures* for the ColorMonitor IIe - Series H (rev. Aug 86). Since this is only a minor change to the repair procedure, no additional labor credit will be given for the soldering. **Do not attempt this procedure unless you know how to solder !**

Removing the main logic board assembly from the Rev. B monitor:

Follow steps 1 through 15 of **Removing the Main Logic PCB** (pp. 3H.9-13). (Follow all specific instructions for Rev. B monitors.)

Removing the AC power cord & back panel from the Rev. B board:

1. Remove the screw and nut that secure the power cable's green ground wire to the metal chassis.

2. Remove the two screws that secure the back panel to the logic board (Figure 44, #1).

3. Remove the plastic clamp and any adhesive that holds the power wires around the ferrite bead (Figure 44, #2).

4. Cut the plastic tie that holds the ferrite bead in place on the logic board.

5. Locate the logic board juncture of the two AC power cable wires (black and white). (See Figure 44, #3.)

6. Cut the two power wires just above the crimp connectors that hold them to the logic board (Figure 44, #4). The rear panel and AC power cord are now free from the logic board.

7. Strip the insulation from the last 1/2 inch of each power wire. Leave the ferrite bead in place on the power wires.

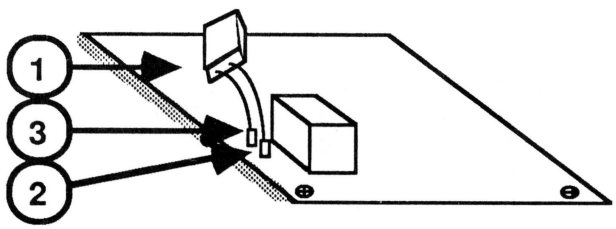

FIGURE 45

Preparing the Rev. A main logic board service module:

1. On the Rev. A main logic board service module, locate the female half of the male/female connector for the AC power supply cable (Figure 45, #1).

2. The female connector's two power wires (white and black) must be desoldered from the metal crimp connectors (Figure 45, #2) that hold them to the logic board. To do this, use the following procedure:

   a. Put on a pair of safety goggles.

   b. Heat the top area (Figure 45, #3) of the metal crimp connector and use a solder sucker to remove the old solder.

   c. Continue to apply heat to the top area of the crimp connector while "wiggling" the wire, until you are able to free the wire from the crimp connector.

   d. Repeat the procedure for the other wire.

   e. Discard the now freed female connector with its wires.

   f. Clear any remaining solder from the top area of the crimp connectors.

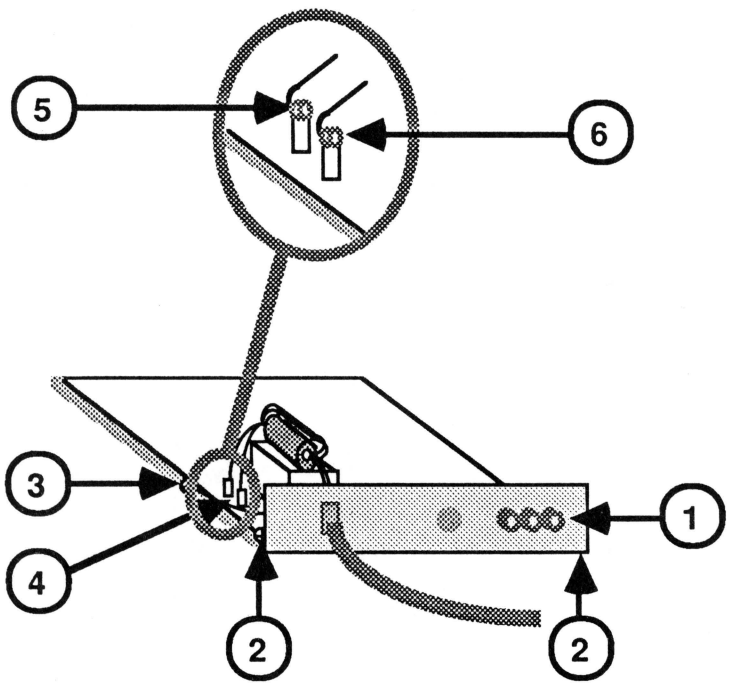

FIGURE 46

Installing the Rev. B rear panel and AC power cord onto the Rev. A main logic board service module:

1. Place the three rear plastic control knobs (from the Rev. B board) onto the adjustment pots at the back of the Rev. A logic board service module.

2. Fit the Rev. B rear panel over the rear control knobs of the Rev. A logic board (Figure 46, #1), making sure the plastic "teeth" on the bottom of the panel fit into the openings in the metal chassis.

3. Replace the two screws that secure the back panel to the logic board chassis (Figure 46, #2).

4. Replace the screw that secures the power supply's green ground wire to the side of the metal chassis (Figure 46, #3). (You do not need to replace the nut you removed from the Rev. B ground connection.)

WARNING: IN THE NEXT STEP, FOLLOW THE DIRECTIONS CAREFULLY. DO NOT SOLDER THE POWER WIRES BACKWARDS !!

5. Solder the two power cable wires of the Rev. B power cord to the crimp connectors (Figure 46, #4) on the Rev. A logic board module, using the following procedure:

    a. Tin the ends of each wire.

    b. Thread the stripped end of the **white** power wire through the hole in the **forward** crimp connector (Figure 46, #5) so that the end of the wire protrudes from the hole about 1/4 inch.

    c. Using needlenose pliers, wrap the end of the wire around the top of the crimp connector.

    d. Solder the connection. **Be careful not to melt insulation on nearby wires!**

    e. If the very end of the wire is left sticking out after you have soldered, clip it off.

    f. Using the same technique described in steps a through e, solder the **black** wire to the **rear** crimp connector (Figure 46, #6).

Installing the reworked Rev. A main logic board module into the Rev. B chassis:

Follow steps 7 through 18 of **Replacing the Main Logic PCB** (ColorMonitor IIe/IIc Take-Apart, rev. Aug 86, p. 3H.17-19). (Follow all specific instructions for Rev. A service modules.)

The installation is now complete. Send the faulty Rev. B board back to Apple. (The desoldering of the AC power cord and removal of the rear panel will not void the module exchange criteria.)

TECHNICAL PROCEDURES
REV. "A"
SERVICE STOCK MODULES

PLACE **BEHIND** THIS PAGE THE **NOVEMBER 1985** ISSUE OF THE FOLLOWING **TAKE-APART** PROCEDURES FOR THE APPLE **COLORMONITOR IIe,IIc** MONITOR.

PAGES: 3H.7 - 3H.19 (November '85 issue)

THIS PAGE AND THE ABOVE MENTIONED PAGES MAY BE PURGED ONLY WHEN:

- YOU HAVE NO **UNREWORKED** REV. A SERVICE MODULES

DISCHARGING THE CATHODE RAY TUBE [CRT] - Series "S"

1. Turn off the monitor and disconnect the AC power cord.

2. Remove the rear cover. ("See Removing the Rear Cover.")

3. Set the monitor upright, with the back facing you.

4. Remove any metal jewelry (rings, watches, bracelets, hanging necklaces, etc.) and grounding wriststraps.

5. Put on safety goggles.

6. Attach one end of an alligator lead to a long flatblade screwdriver, two inches from the insulated handle. Attach the other end to any part of the metal bracket surrounding the power supply board. (Figure 8, #1.)

   WARNING: USE ONLY ONE HAND WHILE DISCHARGING THE CRT. This is to eliminate any chance of your becoming a path for current should your hand slip and touch the metal part of the screwdriver. Grasp only the insulated handle of the screwdriver while discharging the CRT.

7. Slide the screwdriver under the CRT anode cap (Figure 8, #2) and push it towards the center of the cap until the blade contacts the metal anode ring.

   CAUTION: DO NOT USE FORCE. If it is difficult to get the screwdriver under the anode cap, use a smaller screwdriver to loosen the suction of the anode cap on the tube. Discharge the anode by holding the large screwdriver against the anode ring for five seconds.

8. Remove the screwdriver and disconnect it from the alligator clip.

9. Peel back the anode cap until you can see the anode ring at the center. Look at the metal connector in the center of the cap and notice how it is clipped into the CRT. Push on the cap in one direction, freeing the metal connector from the CRT, and lift the cap off the tube.

   NOTE: A secondary charge can build up even after you have discharged the CRT. To ensure that any residual charge is dissipated during the service procedure, establish a ground lead by fastening one alligator clip to the metal chassis and the other clip to the edge of the anode aperture.

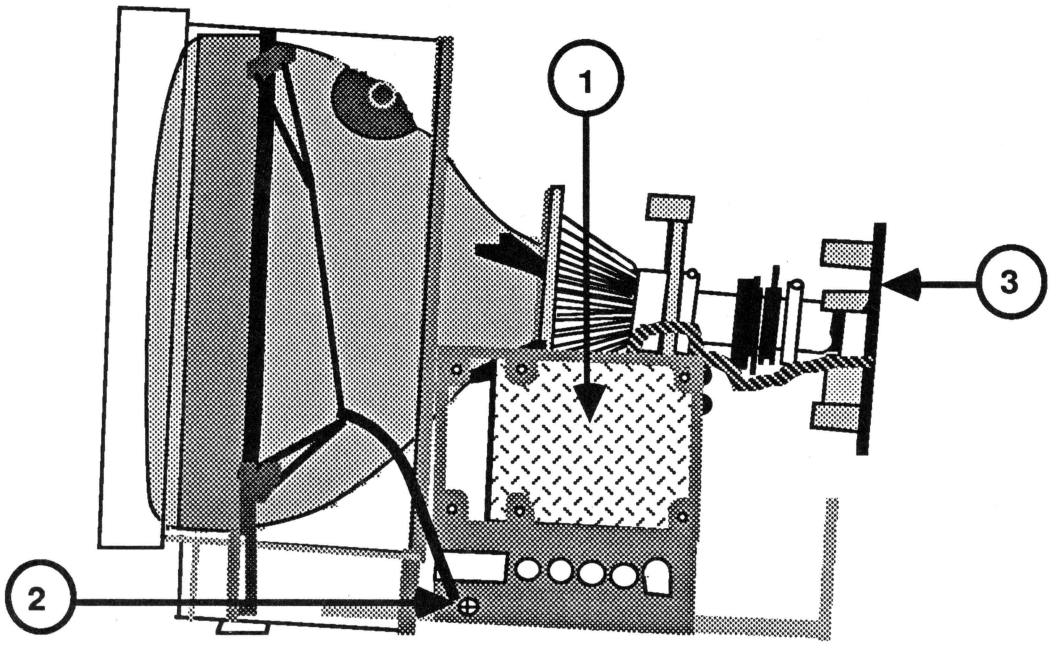

FIGURE 9

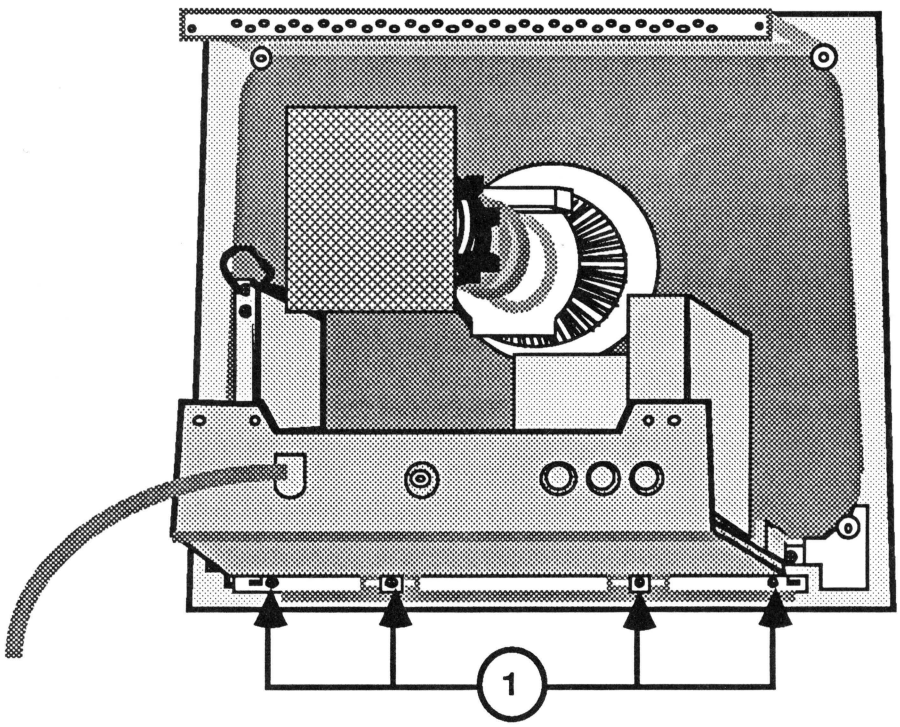

FIGURE 10

REMOVING THE MAIN LOGIC PCB - Series "S"

1. Turn off the monitor and unplug the AC cord.

2. Remove the rear cover. (See "Removing the Rear Cover.")

3. **DISCHARGE THE CRT.** (See "Discharging the Cathode Ray Tube [CRT].")

4. Locate the power supply board (Figure 9, #1).

5. Carefully disconnect the all three connectors (CN9, CN10, and CN11) from the power supply board. (Refer to the labels on the outside of the board.)

6. Set the monitor face down (screen side down) on a protective pad.

7. Remove the four screws (Figure 10, #1) located between the bottom of the metal frame and the plastic case.

   NOTE: These are the only four screws securing the main logic PCB to the case.

8. Support the board with one hand as you tilt the monitor until it is sitting upright (on its feet). Turn the monitor so that the back is facing you.

9. Remove the screws (Figure 9, #2) which secure the CRT ground straps to <u>both sides</u> of the main chassis. (There is one screw on each side.)

10. Carefully pull the CRT socket board (Figure 9, #3) away from the CRT neck until it clears the neck base.

11. Cut any cable ties binding the CRT socket board wires together.

12. Remove all wires from the plastic cable clamp at the right of the CRT neck, just above the flyback transformer.

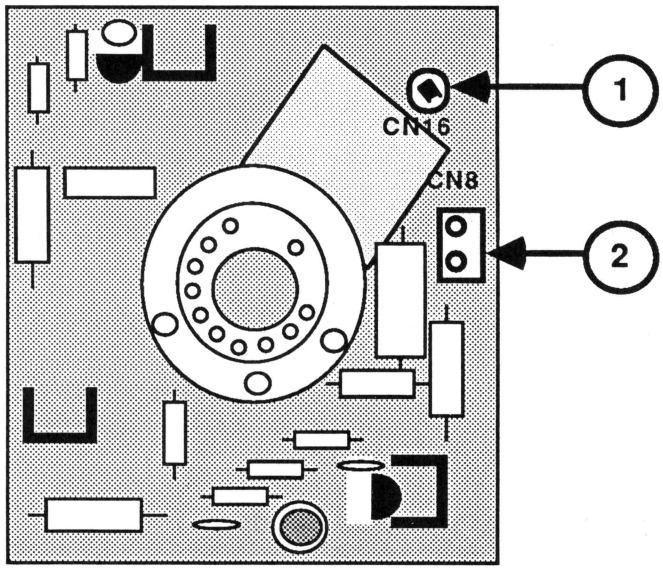

FIGURE 11

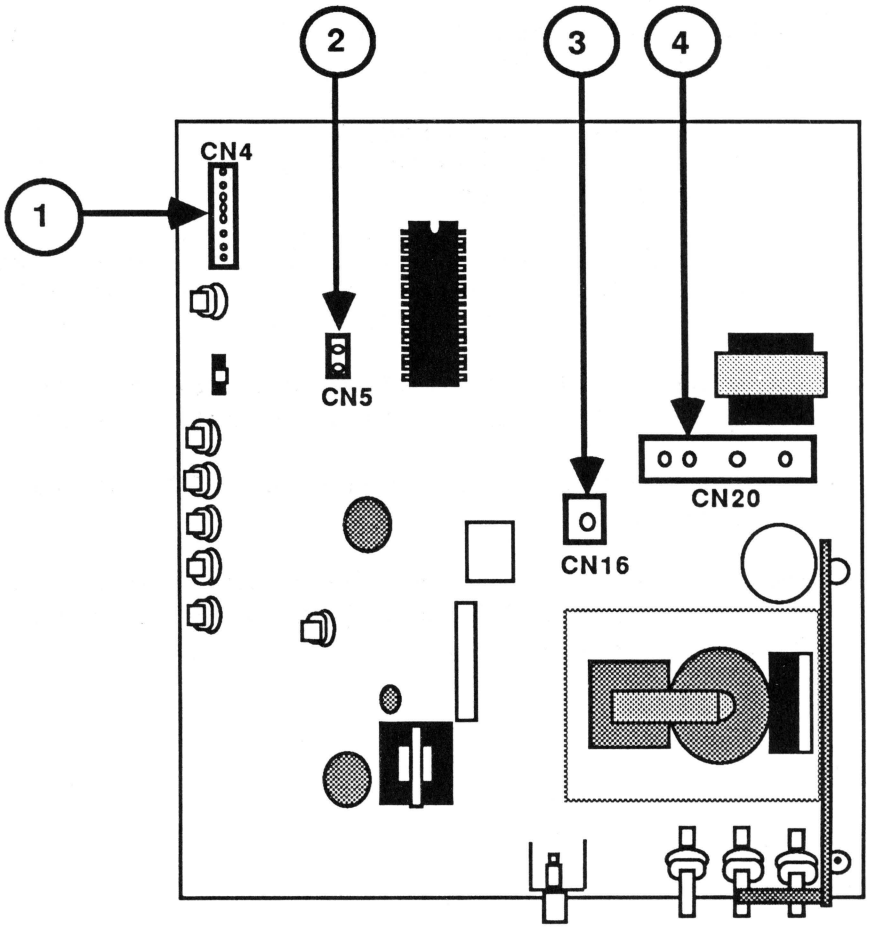

FIGURE 12

13. Turn the socket board so that you can see the component side, as shown in Figure 11.

14. Disconnect CN16 (Figure 11, #1) from the CRT socket board.

15. Very carefully slide the main logic PCB about three inches away from the front of the monitor.

16. Disconnect the following connectors from the main logic PCB:

    a) CN4 -- Figure 12, #1

    b) CN5 -- Figure 12, #2

    c) CN16 -- Figure 12, #3

    d) CN20 -- Figure 12, #4

17. Set the main logic PCB (with power supply board) aside.

IMPORTANT: If you are returning the main logic PCB to Apple, you must first remove the power supply/panel/AC cord assembly from the main logic PCB. See "Removing the Power Supply/ Panel/AC Cord Assembly" for instructions.

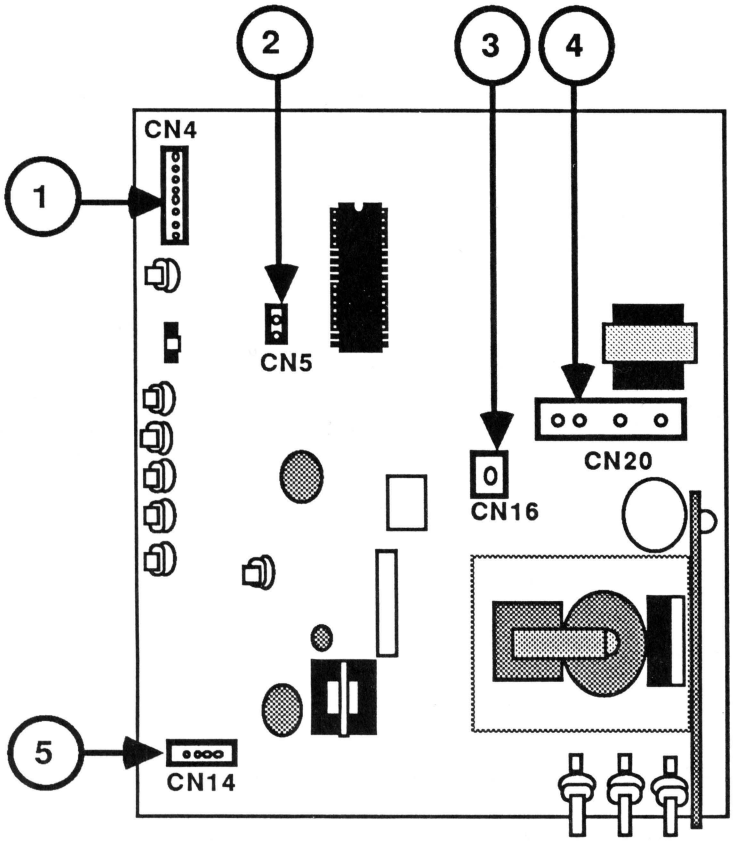

FIGURE 13

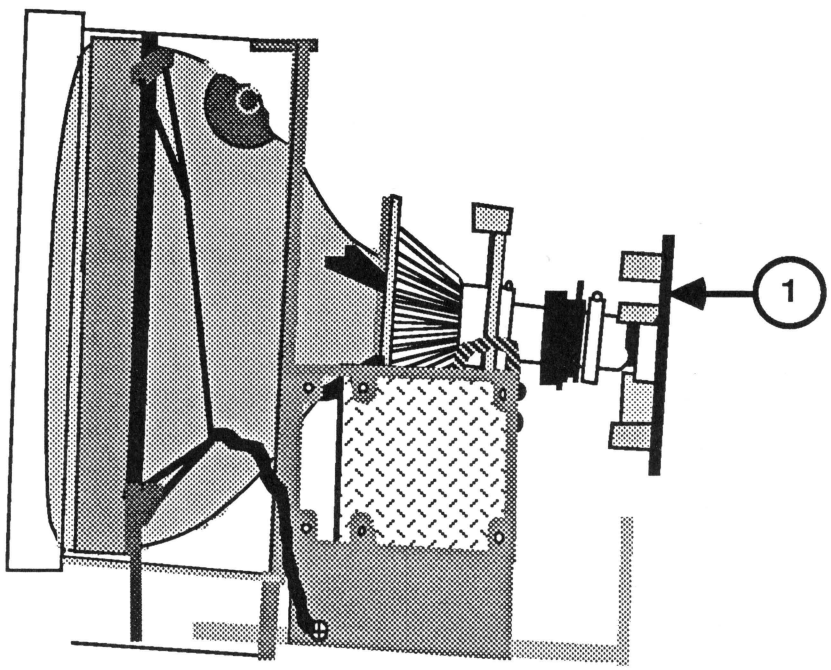

FIGURE 14

REPLACING THE MAIN LOGIC PCB - Series "S"

IMPORTANT: The power supply board must be mounted to its bracket before replacing the main logic PCB. (See "Replacing the Power Supply/Panel/AC Cord Assembly" for instructions.)

1. Set the main logic board under the CRT neck about three inches away from the base of the CRT.

2. Connect the following connectors to the main logic PCB:

   a) CN4 -- Figure 13, #1 (the connector from the control PCB at the front of the monitor).

   b) CN5 -- Figure 13, #2 (the connector from the white only switch at the front of the monitor).

   c) CN16 -- Figure 13, #3 (the black wire coming off the silver ground strap surrounding the CRT).

   d) CN20 -- Figure 13, #4 (the large connector coming off the CRT neck).

   e) CN14 -- Figure 13, #5 (the connector with four colored wires that are soldered at the other end to the CRT socket board).

3. Turn the CRT socket board so that you can see the component side. (See Figure 11 on the preceding page.)

4. Connect the following connectors to the CRT socket board:

   a) CN8 -- Figure 11, #2 (the connector with two wires that are soldered at their other end to the logic board).

   b) Connect the remaining black single connector to CN16 on the CRT socket board (Figure 11, #1). This is the connector attached to the green CRT ground strap at the side of the monitor.

   CAUTION: Be sure that all the connector wires are placed under the CRT neck.

5. Replace the CRT socket board (Figure 14, #1). It fits only one way.

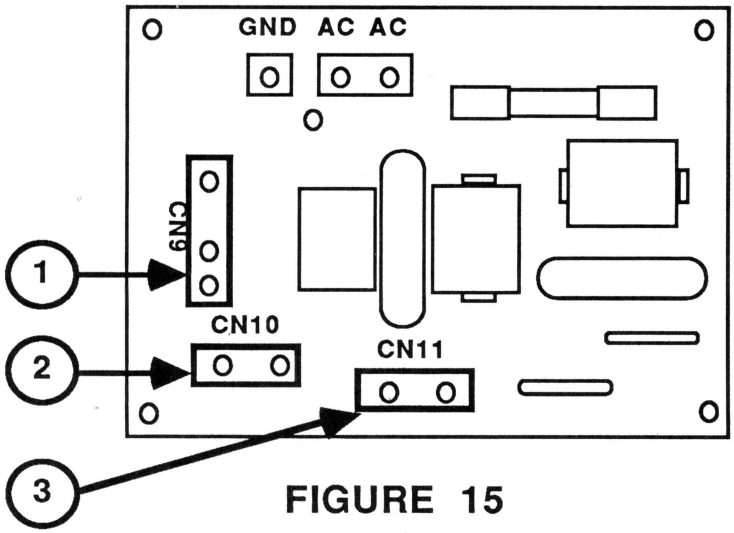

FIGURE 15

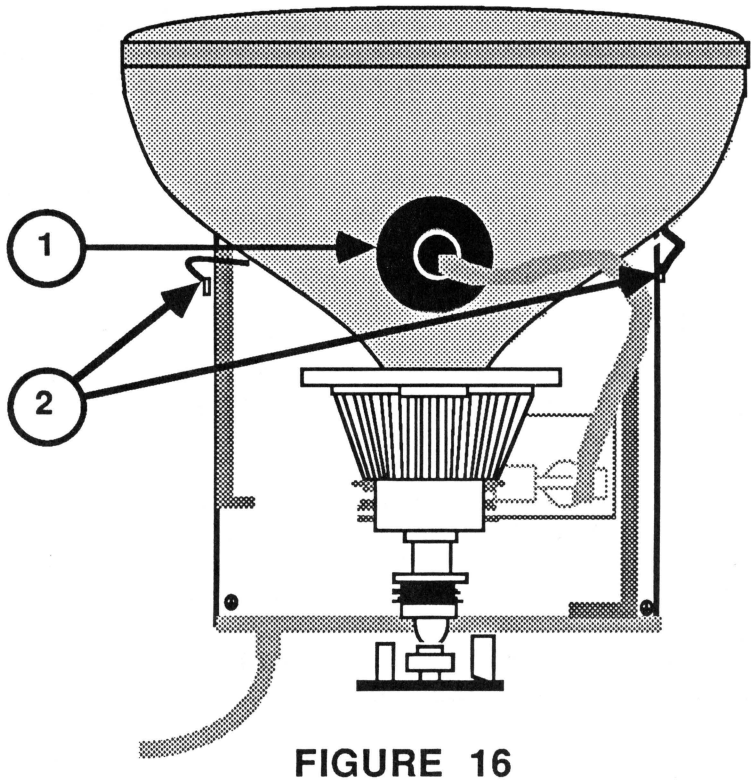

FIGURE 16

Apple ColorMonitor IIe/IIc
Technical Procedures

Section 4

Adjustments

Contents:

Introduction.....4.3
Text (Black & White) Adjustments.....4.5
Color Adjustments
  Materials Needed.....4.7
  Adjustment Procedure Series "S".....4.7
  Adjustment Procedure Series "H".....4.11

WARNING: The Series "H" Rev. B monitor and service module have an "AC/DC transformerless" design -- that is, there is no isolation transformer on the AC power circuit, and the chassis is connected to the neutral line. With such designs, IF THE POWER PLUG IS INSERTED BACKWARDS INTO THE OUTLET (OR IF THE OUTLET IS WIRED BACKWARDS) THE CHASSIS CARRIES A LETHAL CURRENT.

Use only a three-prong grounded electrical outlet installed by a qualified electrician, and do not under any circumstances use an adaptor plug. FOR YOUR SAFETY, APPLE URGES YOU TO USE AN ISOLATION TRANSFORMER BETWEEN THE MONITOR AND THE ELECTRICAL OUTLET.

DO NOT ATTEMPT TO MAKE ANY ADJUSTMENTS ON THE REV. B MONITOR OTHER THAN THOSE DIRECTED HEREIN, AND DO THOSE WITH EXTREME CAUTION!!!

The Series "H" Rev. B monitors and service modules may be identified by the absence of a separate power supply board.

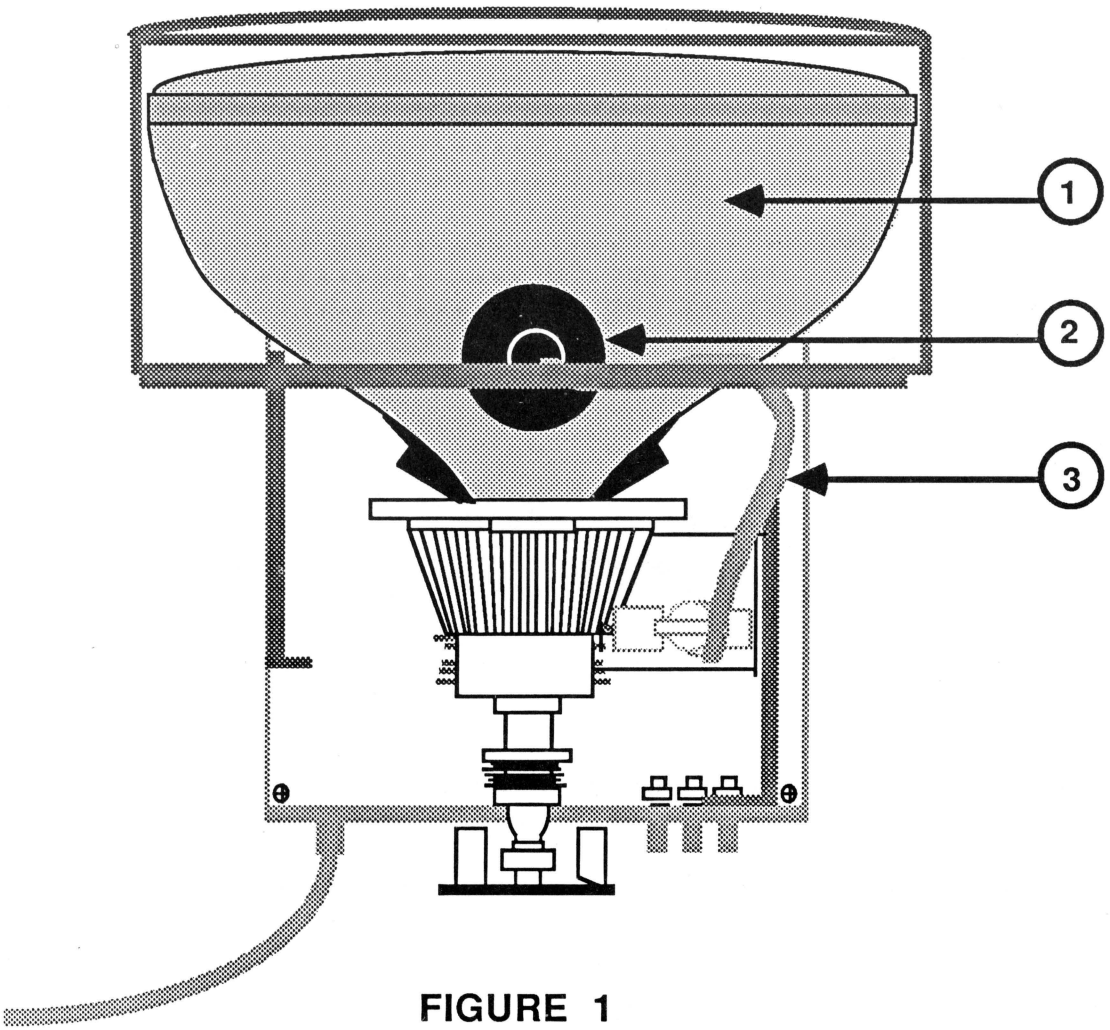

FIGURE 1

COLOR ADJUSTMENTS

Materials Needed

Apple ColorMonitor IIe/IIc
Apple IIe or IIc computer
Isolation transformer (for Series "H" Rev. B)
Apple II Peripherals Diskette
Small plastic flatblade screwdriver (tweaker)
   or plastic alignment tool
Mirror with prop (for viewing screen during adjustments)

Color Adjustment Procedure - Series "S"

1. Turn the monitor off and disconnect the power cord.

2. Disconnect the video cable from the back of the monitor.

3. Remove the rear cover. (See "Removing the Rear Cover" in the Series "S" Take-Apart section.)

4. Set the monitor on its feet, reconnect the power cord and video cable, and turn on the monitor and the computer.

5. Allow the monitor to warm up for at least 15 minutes.

6. Prop the mirror in front of the screen so that you can see the results of your adjustments as you work.

7. Turn the **COLOR INTENSITY** control (Figure 4, #3) on the front panel to its maximum counter-clockwise position.

8. Adjust the front panel **BRIGHTNESS** control (Figure 4, #2) to its detent (click) position.

9. Adjust the **CONTRAST** control (Figure 4, #1) to its maximum clockwise position.

10. Depress the **WHITE ONLY** switch (Figure 4, #5).

11. Locate the internal color controls behind the power supply board (Figure 5). **WARNING: THE POWER SUPPLY BOARD HAS EXTREMELY HIGH VOLTAGES. USE THE INSULATED TOOL IN ONE HAND ONLY, AND WATCH WHAT YOU ARE TOUCHING!**

12. Using the plastic alignment tool or insulated screwdriver, set the following controls to their mechanical centers:

    a. **R-DRIVE** (red) - Figure 5, #1

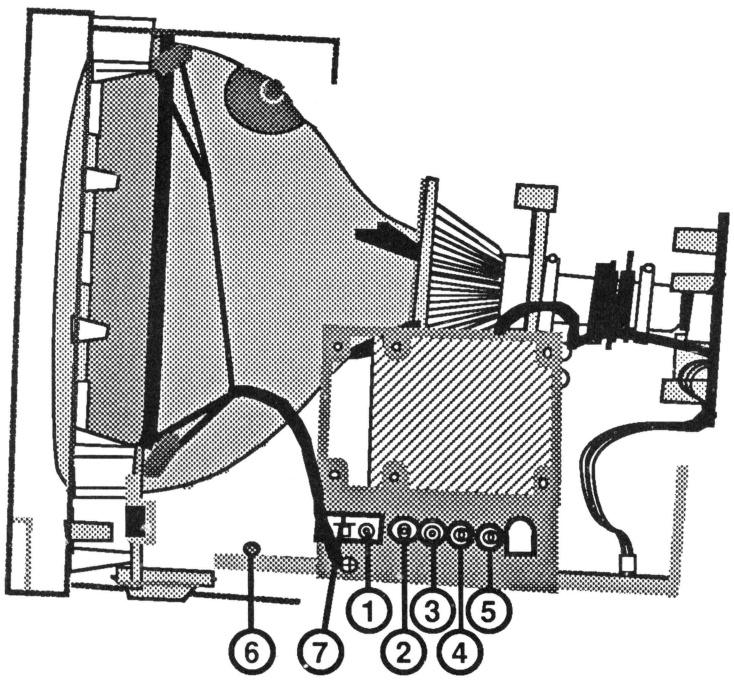

FIGURE 6

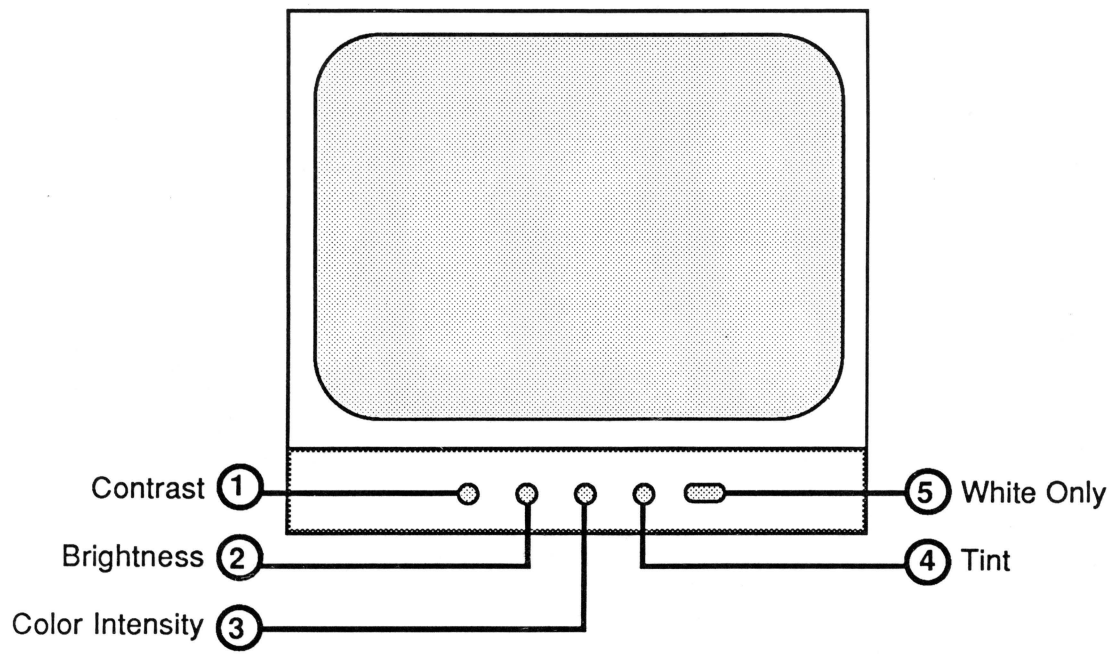

FIGURE 7

22. Adjust the **COLOR INTENSITY** control (Figure 8, #3) and the **CONTRAST** control (Figure 8, #1) for optimum color viewing.

23. Adjust the **TINT** control (Figure 8, #4) until the yellow color bar is at its yellowest hue.

24. Turn off the monitor and the computer and disconnect the video cable and power cords.

25. Replace the rear cover. (See "Replacing the Rear Cover" in the Series "S" Take-Apart section.)

Color Adjustment Procedure - Series "H"

1. Turn the monitor off and disconnect the power cord.

2. Disconnect the video cable from the back of the monitor.

3. Remove the rear cover. (See "Removing the Rear Cover" in the Series "H" Take-Apart section.)

4. Set the monitor on its feet and reconnect the power cord and video cable. **(READ AND FOLLOW WARNING, p. 4.1.)**

5. Install the Apple II Peripherals Diskette in the drive and turn on the computer and the monitor.

6. Allow the monitor to warm up for at least 15 minutes.

7. Select "Monitor Tests" from the program's main menu.

8. Select "Color Bars" from the monitor menu.

9. Adjust the **CONTRAST** control (Figure 8, #1) to its full clockwise position.

10. Adjust the **BRIGHTNESS** control (Figure 8, #2) to its optimum viewing condition.

11. Press <ESCAPE> to return to the monitor menu.

12. Select "Full White Screen" from the monitor menu.

13. Adjust the **COLOR INTENSITY** control (Figure 8, #3) to its maximum counter-clockwise position.

14. Depress the **WHITE ONLY** switch on the front panel (Figure 8, #5).

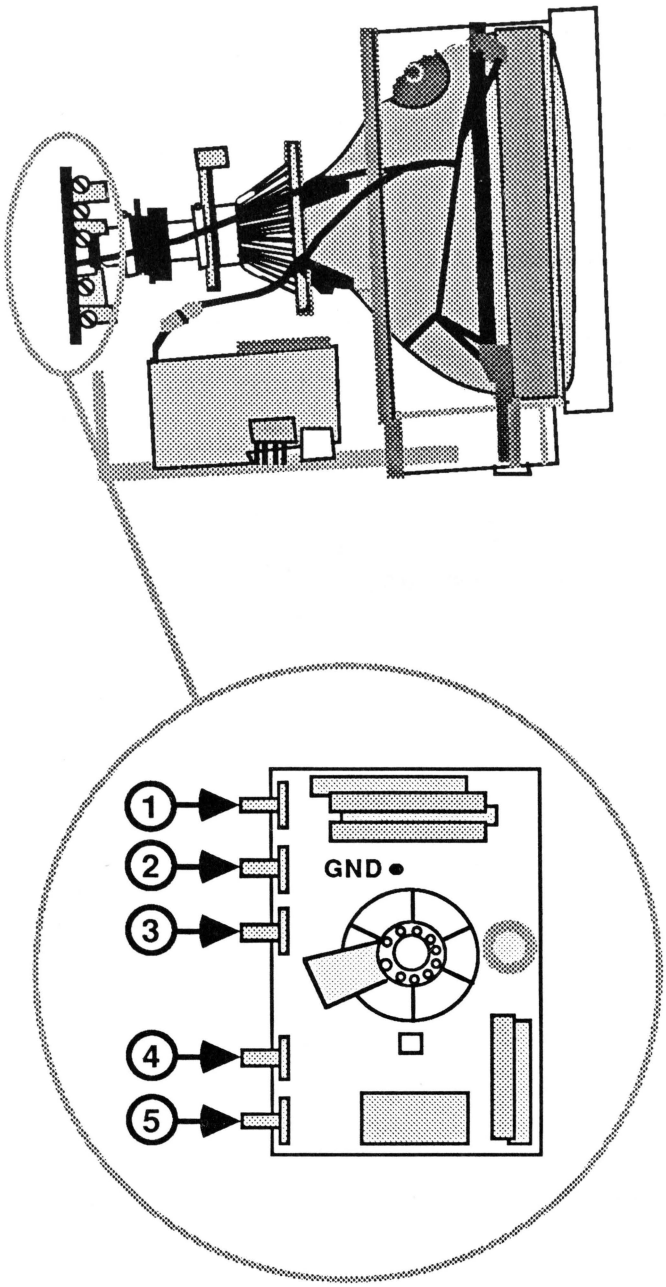

FIGURE 9

15. Locate the internal color controls on the CRT socket board (Figure 9).

    NOTE: The Series "H" monitors do NOT have a SERVICE switch.

16. **Using a plastic alignment tool or insulated screwdriver AND USING EXTREME CAUTION**, set the controls as follows:

    a. **B-DRIVE** (Figure 9, #1) - 1/2 clockwise position.

    b. **R-DRIVE** (Figure 9, #4) - 3/4 clockwise position.

    c. **B-BKG** (Figure 9, #2) - 1/2 clockwise position.

    d. **G-BKG** (Figure 9, #3) - 1/4 clockwise position.

    e. **R-BKG** (Figure 9, #5) - 1/2 clockwise position.

    NOTE: To set a pot at a given position, first find its mechanical center by turning clockwise as far as possible, then counter-clockwise as far as possible. Mechanical center is exactly halfway between those two extremes. The 1/4 clockwise position is halfway between the maximum counter-clockwise position and mechanical center; the 3/4 clockwise position is halfway between mechanical center and the maximum clockwise position.

17. Rotate the **B-DRIVE** control (Figure 9, #1) clockwise until the raster begins to appear bluish.

18. Rotate the **R-BKG** control (Figure 9, #5) to its 1/4 clockwise position, then rotate it clockwise until the raster just begins to show a reddish hue.

19. Alternately adjust the **B-BKG** and **G-BKG** controls (Figure 9, #2 and #3) until the raster is a grayish-white. No predominant color (red, blue, or green) should be visible. These controls should not have to be turned very far in the clockwise direction to achieve a neutral grayish-white raster.

20. Press <ESCAPE> to return to the monitor menu.

21. Select "Color Bars" from the monitor menu.

22. Return the **WHITE ONLY** switch (Figure 10, #5) to its normal position (out).

23. Adjust the front panel **COLOR INTENSITY** control (Figure 10, #3) until the raster displays the desirable amount of color.

24. Adjust the front panel **TINT** control (Figure 10, #4) so that the color block marked "Yellow" is at its yellowest hue.

25. Set the front panel **BRIGHTNESS** control (Figure 10, #2) so that the background behind the color bar pattern appears black.

26. Adjust the front panel **CONTRAST** control (Figure 10, #1) for optimum viewing comfort.

27. The color adjustment should now be within acceptable range. If not, repeat the adjustment procedure, beginning with step 9.

28. When color adjustment is correct, turn off the computer and monitor.

29. Disconnect the power cord and video cable.

30. Replace the rear cover. (See "Replacing the Rear Cover" in the "Series "H" Take-Apart section.)

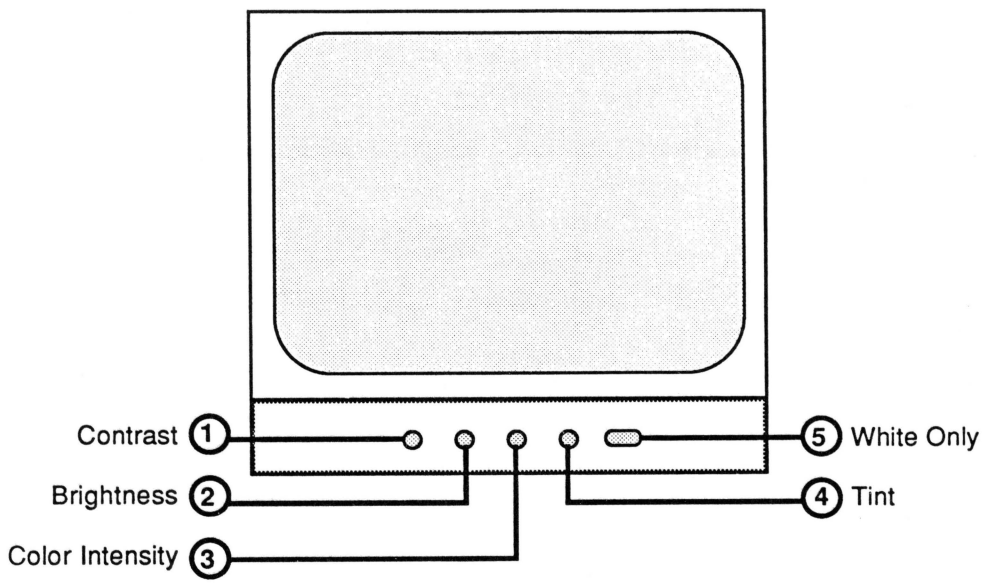

FIGURE 10

Hard Disk 20 Technical Procedures

Section 3

Troubleshooting

Contents:

Things To Remember.....3.2
How To Use The Tables.....3.3
  Table 1 - Fan Not Running
    Ready Light Not Steady or Not Lit.....3.4
  Table 2 - Hard Disk Icon Does Not
    Appear on Macintosh Display.....3.5
  Table 3 - Hard Disk Icon Appears
    but Disk Is Not Ejected.....3.6
  Table 4 - Final Testing.....3.7
Appendix - Special Problems
  Initialization Problems.....3.8
  Daisy-Chaining Problems.....3.10

THINGS TO REMEMBER

The Hard Disk 20 has a total of three exchange modules: the controller card; the power supply; and the hard disk assembly, which consists of the hard disk and the analog card. At first glance the Hard Disk 20 may appear to be simple to troubleshoot; however, there are a few important things you need to do and to be aware of before starting.

1. Be sure to stress to your customers the importance of backing up all files on diskette. This will make your job easier and the customer a lot happier if the hard disk becomes faulty.

2. If you need to reinitialize (or erase) the hard disk, everything stored on the hard disk will be removed permanently. This is the major reason for keeping backup diskettes. Refer to **Initialization Problems** in this section.

   If the customer has not backed up his files and the hard disk will not come ready after following the troubleshooting flowcharts, the information that was stored is gone.

   If the customer has not backed up his files and the hard disk comes ready but some files are not accessible, back up as much information onto diskettes as you can. Then reinitialize (or erase) the hard disk and reinstall the customer's files.

3. Be sure to use a **KNOWN GOOD** Hard Disk 20 Startup diskette. If in doubt try different software.

   Bad software can give the appearance of a mechanical failure.

4. Be sure to test on a **KNOWN GOOD** Macintosh. Once the hard disk is functioning properly, test it with the customer's Macintosh.

5. When returning the hard disk assembly for exchange, it **MUST BE** shipped in Apple-approved packaging. Save the exchange hard disk assembly boxes and packaging materials for future use.

REFER TO THE HARD DISK 20 USER'S MANUAL FOR MORE INFORMATION ON PERFORMING BACKUPS.

2. Rebuild the Hard Disk 20's Desktop

a. Press and hold down the **COMMAND** and **OPTION** keys, while you start up from the Hard Disk 20 Startup diskette. (Be sure to hold down both keys continuously during the entire booting sequence.)

   A message will appear asking if you want to rebuild the Desktop file.

b. Select **OK**.

   The Desktop will be rebuilt. (This will take a few minutes.)

c. Power off the Macintosh and start up from the Startup diskette.

d. Run the diagnostics.

   If the problem still exists, continue to step 3.

WARNING: If you perform step 3, all data on the hard disk will be erased.

3. Initialize the Hard Disk 20

a. Press and hold down the **COMMAND, OPTION,** and **TAB** keys, while you boot the Hard Disk 20 Startup diskette. (Be sure to hold down all three keys continuously during the entire booting sequence.)

   A message will appear asking if you want the Hard Disk 20 completely erased and its contents destroyed.

b. Select **OK**.

   This choice erases all data on the hard disk.

c. Run the diagnostics.

Daisy-Chaining Problems

Up to three additional hard or floppy disk drives may be "daisy-chained" to the Hard Disk 20 through the expansion port that is connected to the Hard Disk 20's controller board. If a customer has attempted to set up a daisy-chain and finds that not all of his attached devices are recognized by the Macintosh (that is, their icons don't show up on the desktop), or that their operation is intermittent or "flaky," the problem MAY be in the Hard Disk 20's expansion port linkage. Attempt to isolate the problem by using the following troubleshooting procedure:

1. Check for faulty or loose cables.

2. If the cables are OK, check to see if each of the daisy-chained drives will work when connected directly to the Macintosh.

3. If the drives function normally when connected directly to the Macintosh, then the likely cause is a faulty expansion port connector on the controller board of the Hard Disk 20, and the controller board must be replaced.

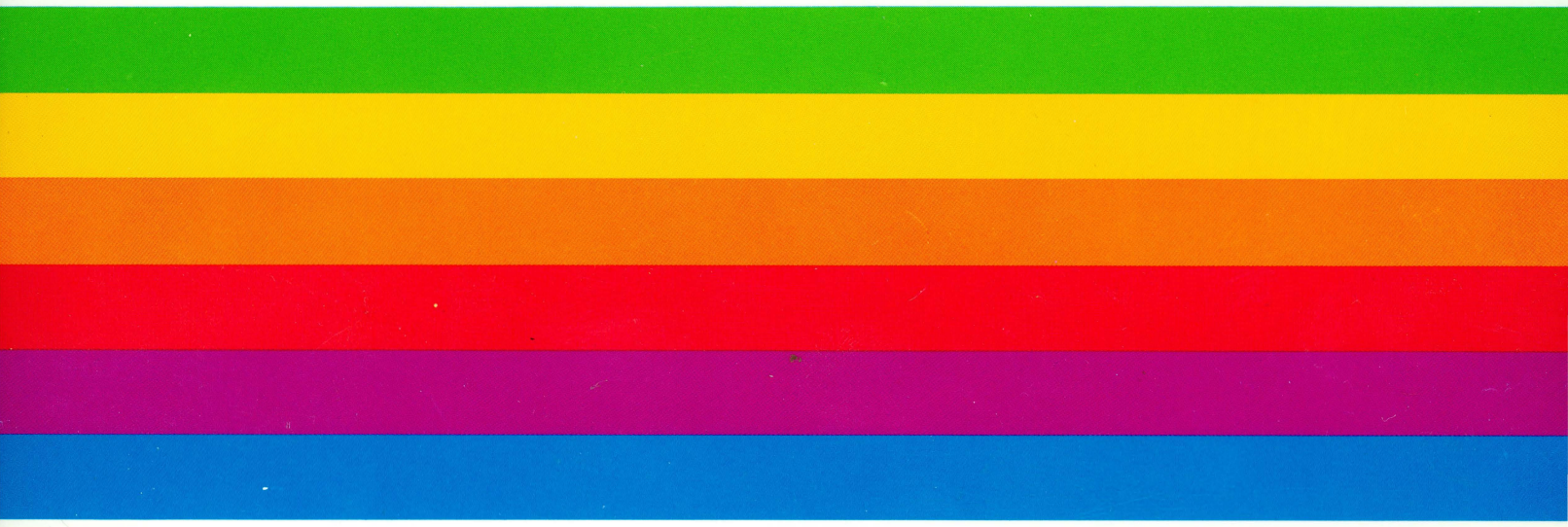

apple® computer inc.

20525 Mariani Ave.
Cupertino, California 95014
(408) 996-1010

apple service
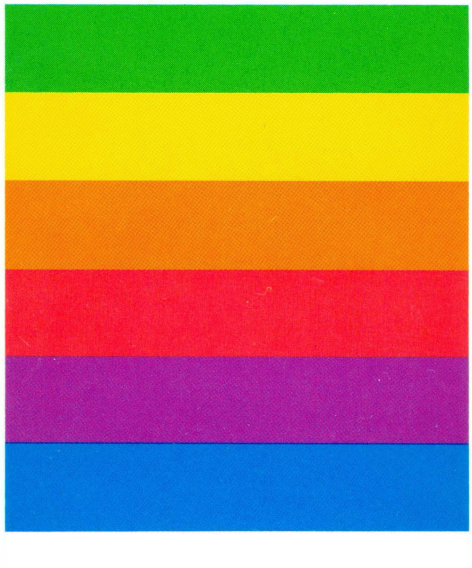
LEVEL I TECHNICAL PROCEDURES #072-0062 VOLUME III